Electric Actuator

High Rigidity and High Precision Slider Type

Battery-less Absolute (Step Motor 24 VDC) | AC Servo Motor

CE UKCA
* Excludes auto switches
For details, refer to page 128.

RoHS

Circular arc grooves allow for high rigidity and high precision.

Moment resistance[*1 *2]
improved by up to 61%

Table displacement[*1]
reduced by up to 50%

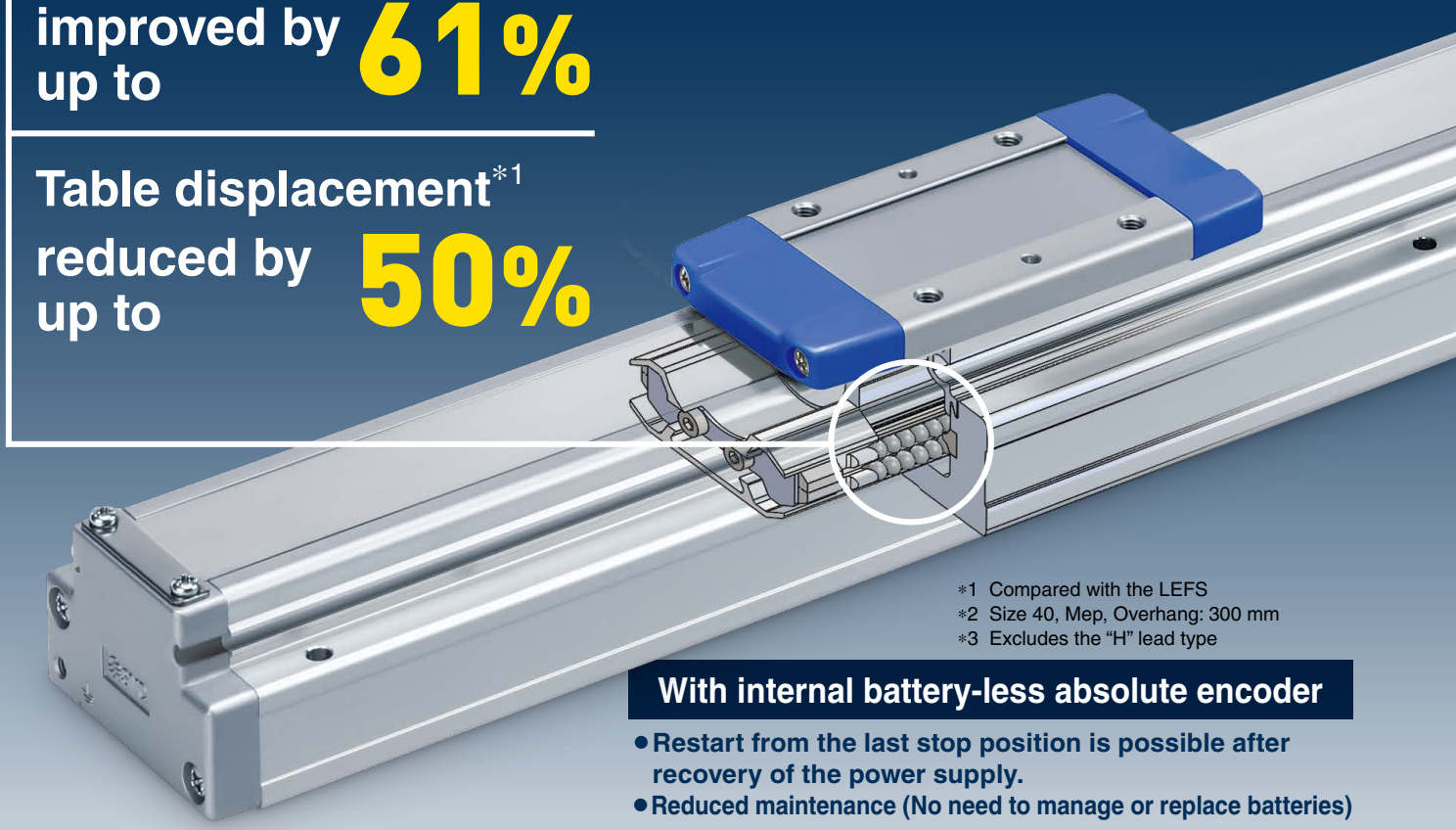

*1 Compared with the LEFS
*2 Size 40, Mep, Overhang: 300 mm
*3 Excludes the "H" lead type

With internal battery-less absolute encoder

- Restart from the last stop position is possible after recovery of the power supply.
- Reduced maintenance (No need to manage or replace batteries)

Positioning repeatability: ±0.01 mm[*3]

New A max. stroke of up to 1200 mm is now supported (size 40).
Intermediate strokes are now available in 50 mm increments.

Battery-less Absolute (Step Motor 24 VDC)

Size: 16, 25, 32, 40

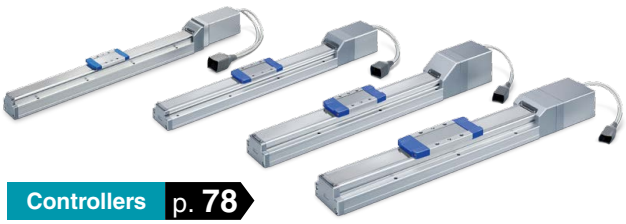

Controllers p. 78

AC Servo Motor

Size: 25, 32, 40

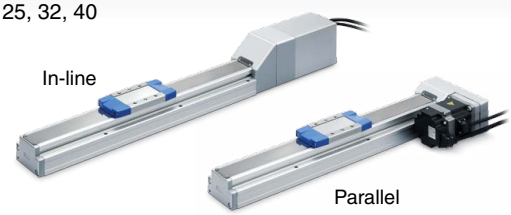

Drivers p. 96

LEKFS Series

SMC

CAT.ES100-144B Ⓐ

With a 4-row circular arc on each side for high rigidity and high precision (zero clearance)

Improved moment resistance

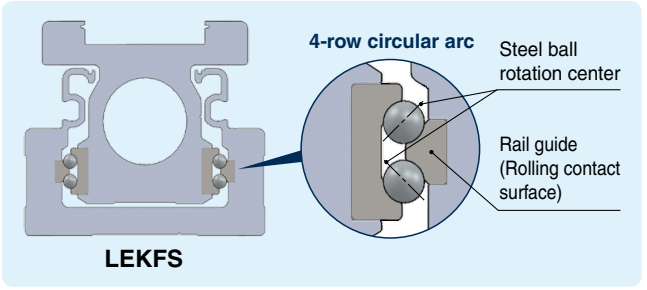

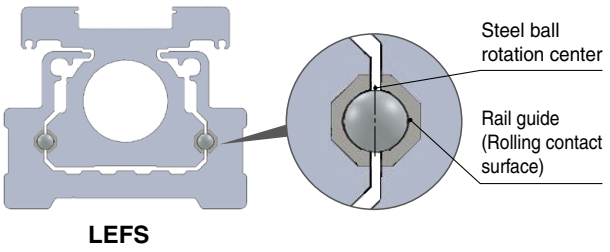

Improved Dynamic Allowable Moment

Size	Moment direction	Work load [kg] (Overhang: 300 mm)	
		High rigidity guide LEKFS	LEFS
16	Pitching (Mep)	3.5 (16% increase)	3.0
25		7.5 (10% increase)	6.8
32		18 (35% increase)	13.3
40		37 (61% increase)	23

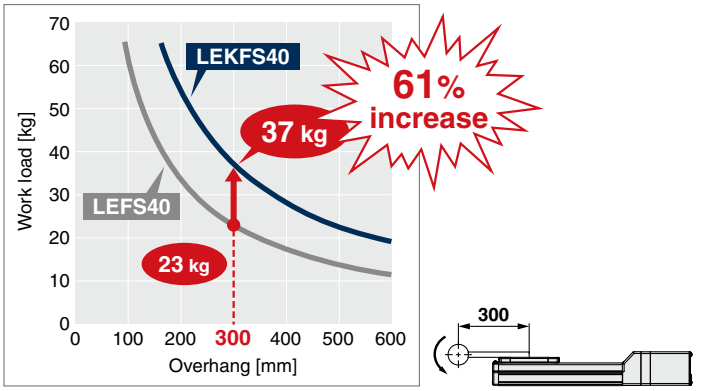

Table displacement amount reduced to 1/2

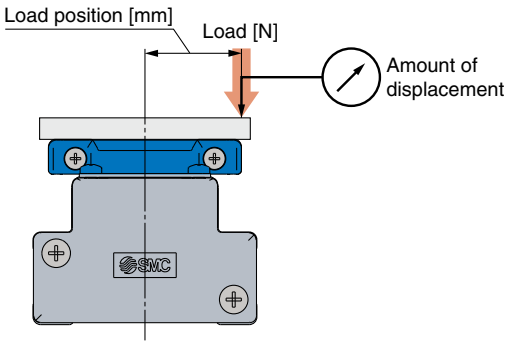

Table Displacement

Size	Table displacement [mm] (Overhang: 300 mm)		Load position [mm]	Load [N]
	High rigidity guide LEKFS	LEFS		
16	0.015 (50% reduction)	0.031	20	100
25	0.022 (50% reduction)	0.044	25	200
32	0.036 (50% reduction)	0.072	30	450
40	0.027 (50% reduction)	0.053	37	500

Zero table clearance

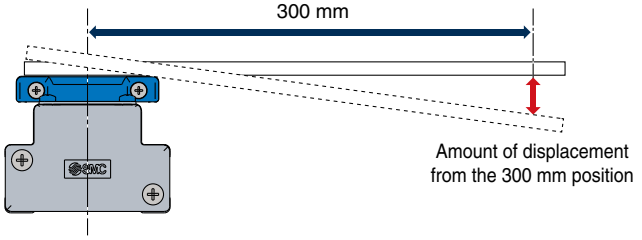

∗ The image shows the displacement amount with zero load.

Table Clearance

Size	Displacement due to table clearance [mm]	
	High rigidity guide LEKFS	LEFS
16	0	0.107
25	0	0.079
32	0	0.068
40	0	0.052

Auto switches are mountable.

Allows for position detection of the table throughout the stroke

LEKFS32/40

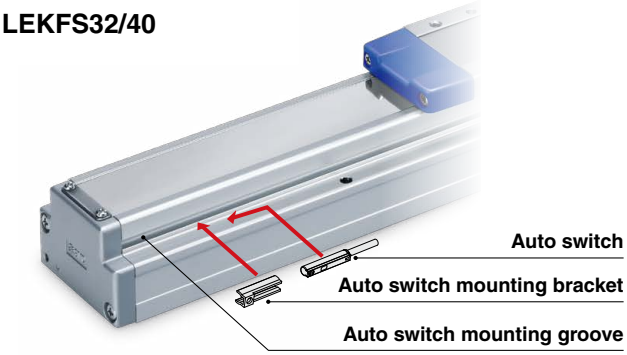

LEKFS16/25

For checking the limit and the intermediate signal
Applicable to the D-M9□, D-M9□E, and D-M9□W (2-color indicator)

* The auto switches should be ordered separately. For details, p. 70

2-color indicator solid state auto switch
Accurate setting of the mounting position can be performed without mistakes.

A green light lights up when within the optimum operating range.

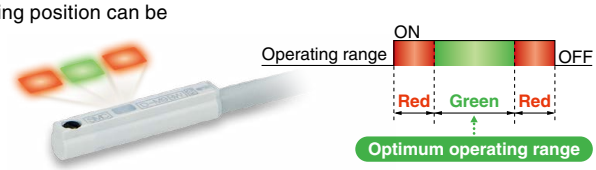

Same dimensions as the LEF/Complete mounting compatibility is ensured.

* Excludes size 16

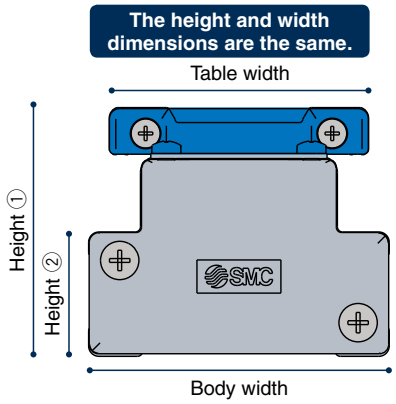

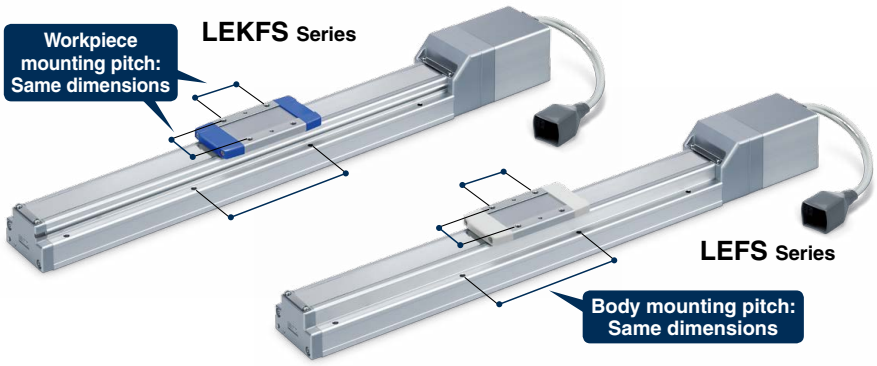

The body bottom positioning pin holes have been standardized.

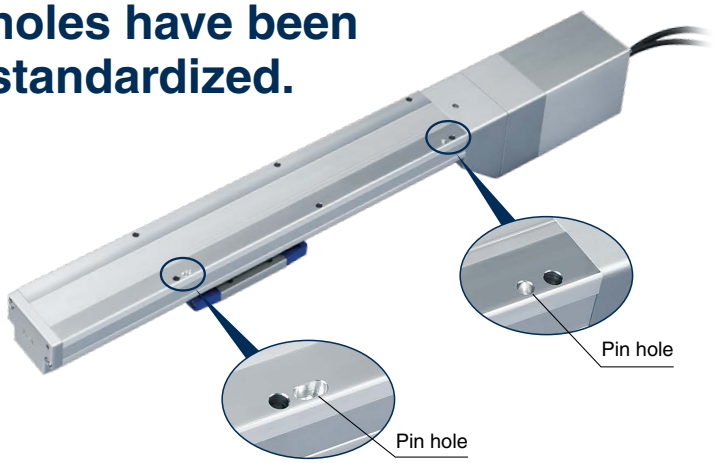

Magnet for adhesion of the dust seal band

Improved adhesion enhances the dustproof performance and reduces dust seal band blistering.

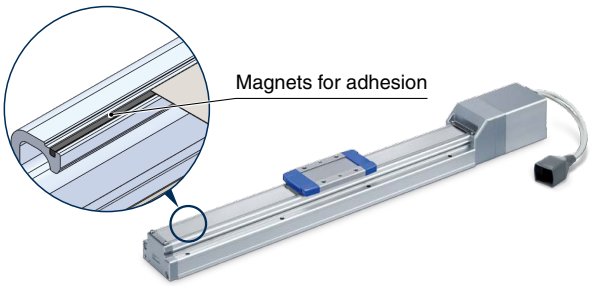

Application Examples

● **Palletizing**

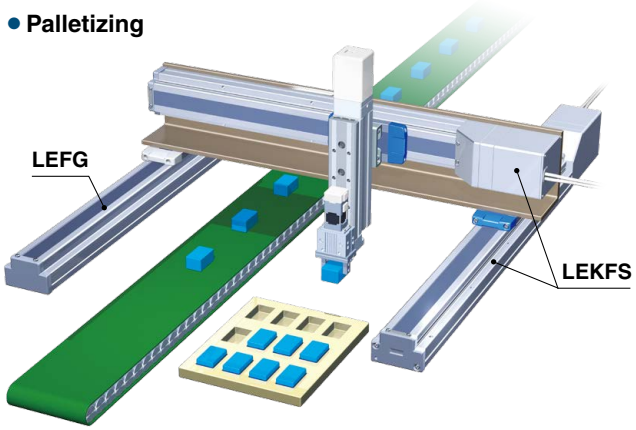

● **Positioning transfer**

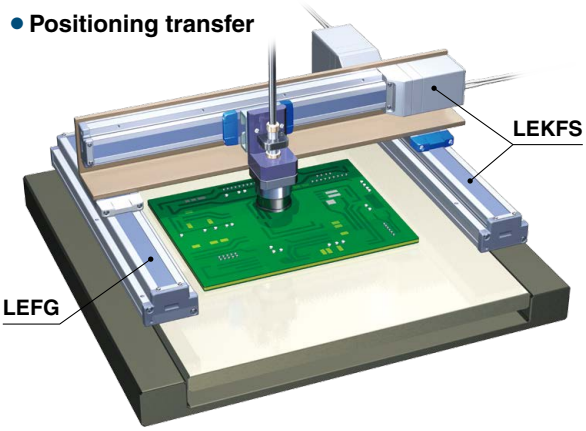

● **Coating work**

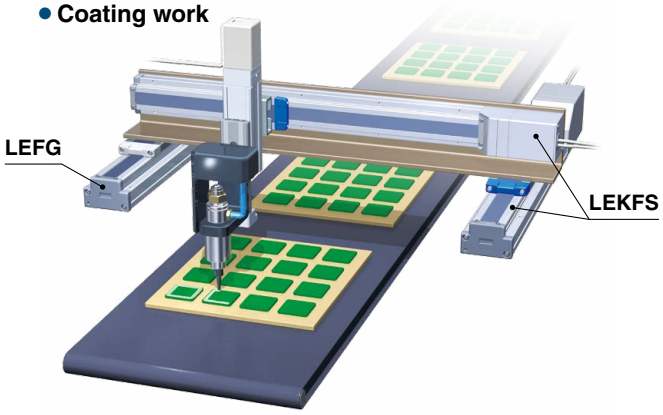

Variations

Type	Size	Lead [mm]	Stroke [mm]	Max. work load [kg]		Max. acceleration/ deceleration [mm/s²]	Max. speed [mm/s]
				Horizontal	Vertical		
Battery-less absolute (Step motor 24 VDC) 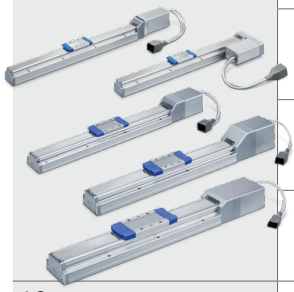	16	10	50, 100, 150, 200, 250, 300, 350, 400, 450 ,500	14	2	3000	700
		5		15	4		360
	25	20	50, 100, 150, 200, 250, 300, 350, 400, 450 ,500, 600, 700, 800	12	0.5		1100
		12		25	7.5		750
		6		30	15		400
	32	24	50, 100, 150, 200, 250, 300, 350, 400, 450, 500, 600, 700, 800, 900, 1000	20	4		1200
		16		45	10		800
		8		50	20		400
	40	30	150, 200, 250, 300, 350, 400, 450, 500, 600, 700, 800, 900, 1000, 1100, 1200	25	2		1200
		20		55	2		850
		10		65	23		300
AC servo motor 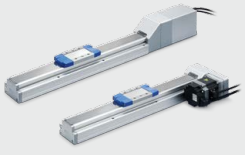	25	20	50, 100, 150, 200, 250, 300, 350, 400, 450 ,500, 600, 700, 800	10	4	20000	1500
		12		20	8		900
		6		20	15		450
	32	24	50, 100, 150, 200, 250, 300, 350, 400, 450, 500, 600, 700, 800, 900, 1000	30	5		1500
		16		40	10		1000
		8		45	20		500
	40	30	150, 200, 250, 300, 350, 400, 450, 500, 600, 700, 800, 900, 1000, 1100, 1200	30	7		1500
		20		50	15		1000
		10		60	30		500

Series Variations Motorless Type

Can be used with your current motor and driver!
Manufacturers of compatible motors: 18 companies

Mitsubishi Electric Corporation	YASKAWA Electric Corporation	SANYO DENKI CO., LTD.
OMRON Corporation	Panasonic Corporation	FANUC CORPORATION
NIDEC SANKYO CORPORATION	KEYENCE CORPORATION	FUJI ELECTRIC CO., LTD.
MinebeaMitsumi Inc.	Shinano Kenshi Co., Ltd.	ORIENTAL MOTOR Co., Ltd.
FASTECH Co., Ltd.	Rockwell Automation, Inc. (Allen-Bradley)	Beckhoff Automation GmbH
Siemens AG	Delta Electronics, Inc.	ANCA Motion

Click here for details

Ball screw drive
LEKFS Series

Size	Stroke
25	50, 100, 150, 200, 250, 300, 350, 400, 450, 500, 600, 700, 800
32	50, 100, 150, 200, 250, 300, 350, 400, 450, 500, 600, 700, 800, 900, 1000
40	150, 200, 250, 300, 350, 400, 450, 500, 600, 700, 800, 900, 1000, 1100, 1200

Battery-less Absolute (Step Motor 24 VDC)

Controllers p. 78

▶ **Step data input type**
JXC51/61 Series

▶ **EtherCAT/EtherNet/IP™/PROFINET/DeviceNet®/ IO-Link/CC-Link direct input type**
JXCE□/91/P1/D1/L□/M1 Series

With STO sub-function

＊ Excluding the JXCLF

AC Servo Motor

Drivers p. 96

＊ Only the LECSA and LECS□-T are compliant.

▶ **For absolute encoders**

- Pulse input type/Positioning type
  LECSB-T Series
- CC-Link direct input type
  LECSC-T Series
- SSCNETⅢ/H type
  LECSS-T Series
- MECHATROLINK type
  LECY□ Series

▶ **For incremental encoders**

- Pulse input type/Positioning type
  LECSA Series

Step Data Input Type JXC51/61 Series p. 79

ACT 2 Controller Setting Software ACT Controller 2

Easy-to-use setting software ACT Controller 2 (For PC)

Various functions available in normal mode (Compared with the existing ACT Controller)

● Parameter and step data setting

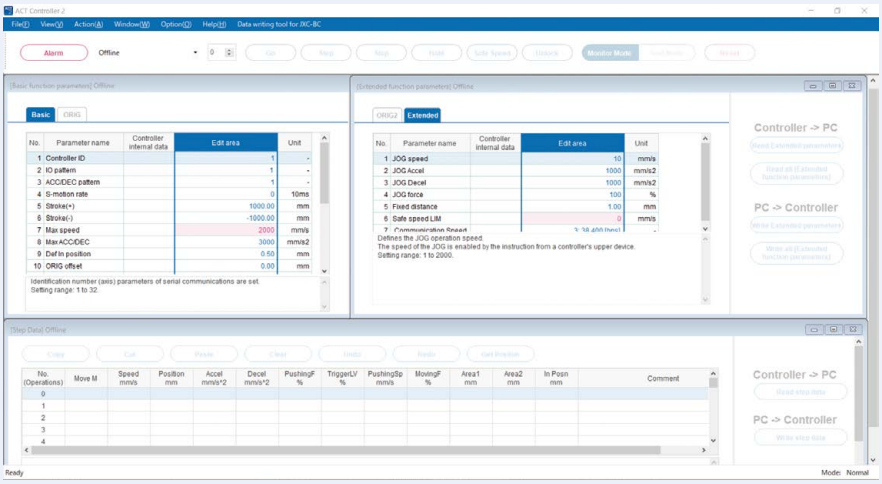

＊ Customers operating computers with specifications other than Windows 10/64 bit and Windows 11 should use the existing ACT Controller.

● Alarm confirmation

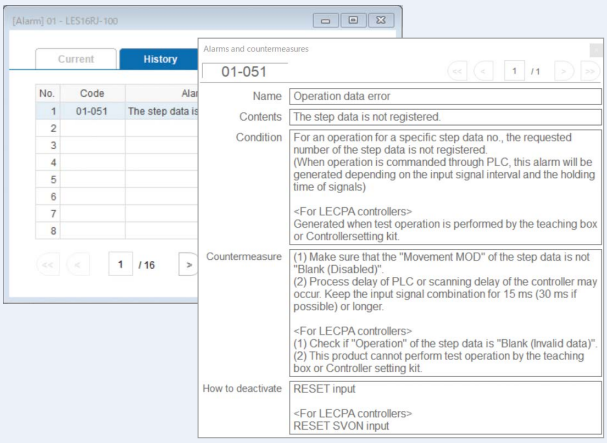

When an alarm is generated, the alarm details and countermeasures can be confirmed.

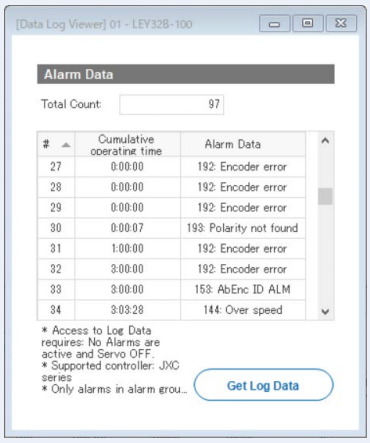

When an alarm is generated, the cumulative startup time of the controller can be confirmed.

● Waveform monitoring

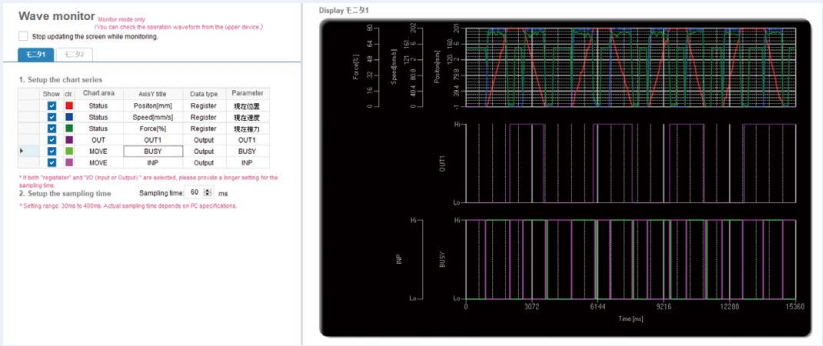

The position, speed, force, and input/output signals' waveform data during operation can be measured.

＊ Waveform data cannot be measured during an ACT Controller 2 test operation.

Step Data Input Type JXC51/61 Series p. 79

ACT 2 Controller Setting Software ACT Controller 2

● The JXC-BC writing tool

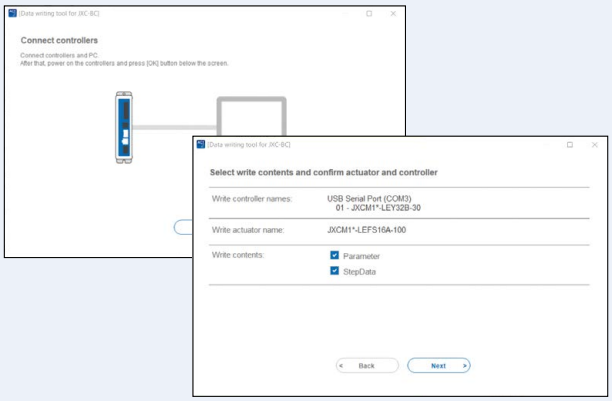

The writing tool can be used to write the connected actuator's parameters and step data to a JXC series blank controller.

● Customizable plug-in functions

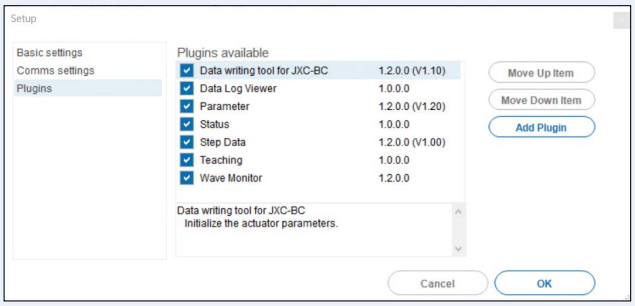

Which plug-in functions are displayed as well as the display order are customizable. Customers can add the functions they require.

In normal mode, various other test operation methods (program operation, jogging, moving of the constant rate, etc.), signal status monitoring, one-touch switching between Japanese and English, and other functions are available.

For immediate use, operate in easy mode.

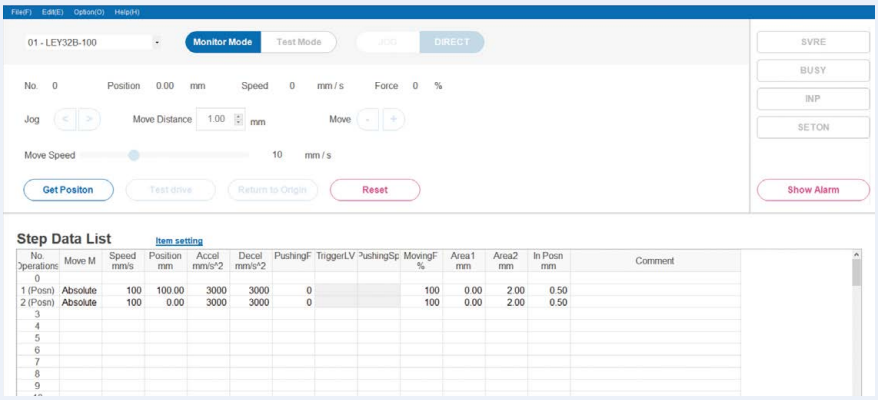

Step data setting, various test operations, and status confirmation can be done on a single screen.

How to download the setting software

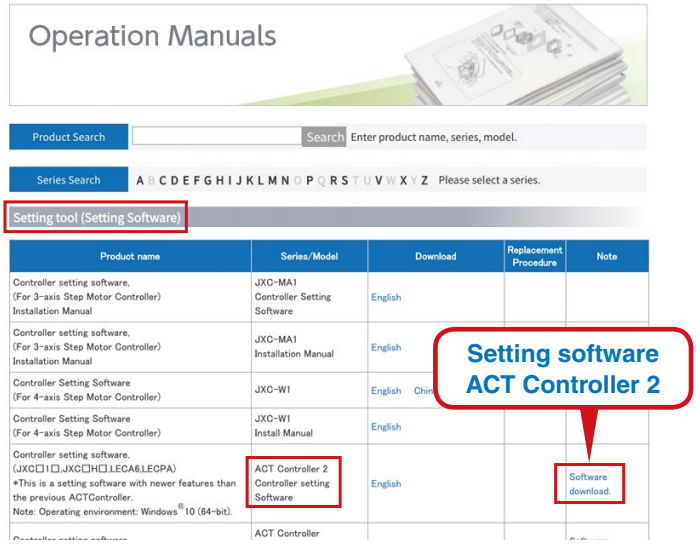

From the SMC website

Documents/Download

↓

Operation Manuals

↓

Electric Actuators

↓

Setting tool (Setting Software)

Setting software ACT Controller 2

Step Data Input Type JXC51/61 Series p. 79

Teaching Box

◎Normal Mode

- Multiple step data can be stored in the teaching box and transferred to the controller.
- Continuous test drive by up to 5 step data

Teaching box screen

- Each function (step data setting, test drive, monitoring, etc.) can be selected from the main menu.

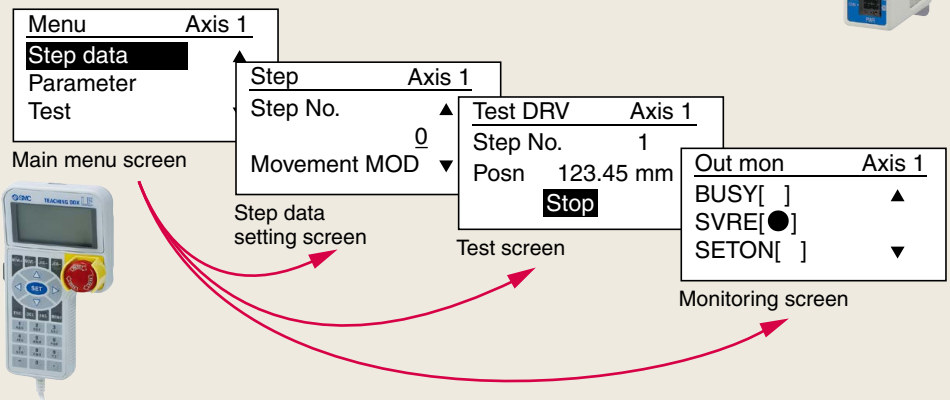

◎Easy Mode

- The simple screen without scrolling promotes ease of setting and operation.
- Choose an icon from the first screen to select a function.
- Set the step data and check the monitor on the second screen.

Example of setting the step data

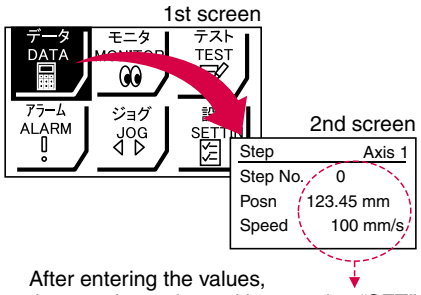

After entering the values, they can be registered by pressing "SET."

Example of checking the operation status

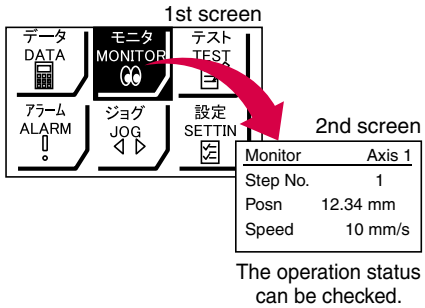

The operation status can be checked.

Teaching box screen

- **Data can be set by inputting only the position and speed.** (Other conditions are preset.)

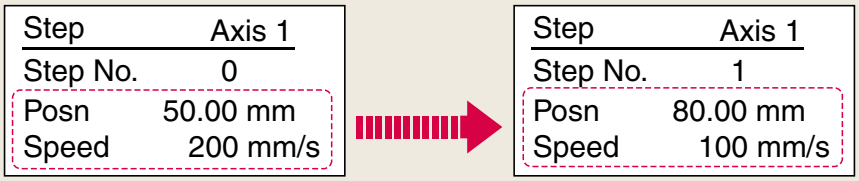

The actuator and controller are provided as a set. (They can be ordered separately as well.)

Confirm that the combination of the controller and actuator is correct.

<Check the following before use.>

① Check the actuator label for the model number. This number should match that of the controller.

② Check that the Parallel I/O configuration matches (NPN or PNP).

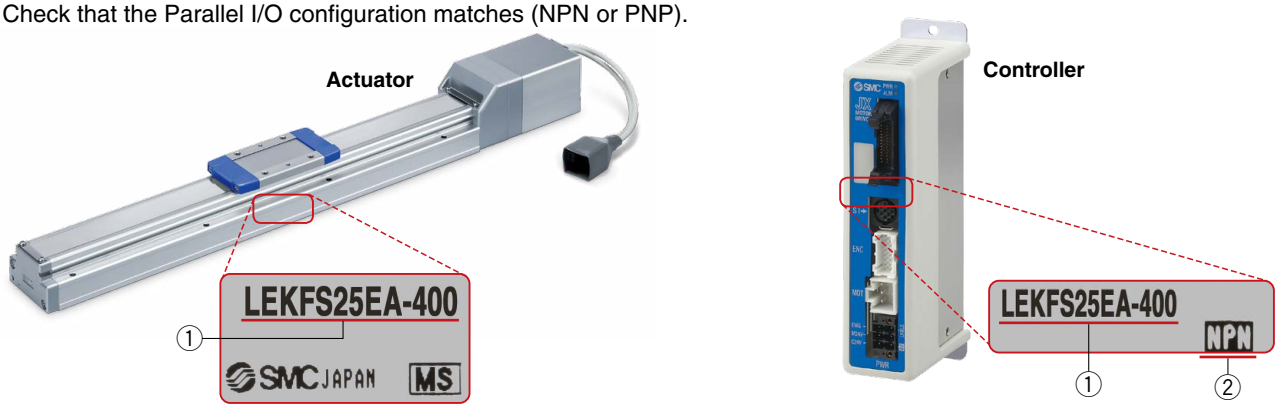

Function

Item	Step data input type JXC51/61
Step data and parameter setting	• Input from controller setting software (PC) • Input from teaching box
Step data "position" setting	• Numerical value input from controller setting software (PC) or teaching box • Input numerical value • Direct teaching • JOG teaching
Number of step data	64 points
Operation command (I/O signal)	Step No. [IN*] input ⇒ [DRIVE] input
Completion signal	[INP] output

Setting Items

TB: Teaching box PC: Controller setting software

Item		Contents	Easy Mode		Normal Mode	Step data input type JXC51/61
			TB	PC	TB/PC	
Step data setting (Excerpt)	Movement MOD	Selection of "absolute position" and "relative position"	△	●	●	Set at ABS/INC
	Speed	Transfer speed	●	●	●	Set in units of 1 mm/s
	Position	[Position]: Target position [Pushing]: Pushing start position*1	●	●	●	Set in units of 0.01 mm
	Acceleration/Deceleration	Acceleration/deceleration during movement	●	●	●	Set in units of 1 mm/s²
	Pushing force	Rate of force during pushing operation*1	●	●	●	Set in units of 1%
	Trigger LV	Target force during pushing operation*1	△	●	●	Set in units of 1%
	Pushing speed	Speed during pushing operation*1	△	●	●	Set in units of 1 mm/s
	Moving force	Force during positioning operation	△	●	●	Set to 100%
	Area output	Conditions for area output signal to turn ON	△	●	●	Set in units of 0.01 mm
	In position	[Position]: Width to the target position [Pushing]: How much it moves during pushing	△	●	●	Set to 0.5 mm or more (Units: 0.01 mm)
Parameter setting (Excerpt)	Stroke (+)	+ side position limit	×	×	●	Set in units of 0.01 mm
	Stroke (–)	– side position limit	×	×	●	Set in units of 0.01 mm
	ORIG direction	Direction of the return to origin can be set.	×	×	●	Compatible
	ORIG speed	Speed during return to origin	×	×	●	Set in units of 1 mm/s
	ORIG ACC	Acceleration during return to origin	×	×	●	Set in units of 1 mm/s²
Test	JOG		●	●	●	Continuous operation at the set speed can be tested while the switch is being pressed.
	MOVE		×	●	●	Operation at the set distance and speed from the current position can be tested.
	Return to ORIG		●	●	●	Compatible
	Test drive	Operation of the specified step data	●	●	● (Continuous operation)	Compatible
	Forced output	ON/OFF of the output terminal can be tested.	×	×	●	Compatible
Monitor	DRV mon	Current position, speed, force, and the specified step data can be monitored.	●	●	●	Compatible
	In/Out mon	Current ON/OFF status of the input and output terminal can be monitored.	×	×	●	Compatible
ALM	Status	Alarm currently being generated can be confirmed.	●	●	●	Compatible
	ALM Log record	Alarms generated in the past can be confirmed.	×	×	●	Compatible
File	Save/Load	Step data and parameters can be saved, forwarded, and deleted.	×	×	●	Compatible
Other	Language	Can be changed to Japanese or English	●	●	●	Compatible

△: Can be set from TB Ver. 2.** (The version information is displayed on the initial screen.)

*1 Check the catalog and operation manual of each actuator model which is capable of performing pushing operations. The "Specifications" table for models which are capable of performing pushing operations includes an item for the pushing force.

Fieldbus Network

EtherCAT/EtherNet/IP™/PROFINET/ DeviceNet®/IO-Link/CC-Link Direct Input Type Step Motor Controller/JXC□ Series p. 86

ACT 2 Controller Setting Software ACT Controller 2

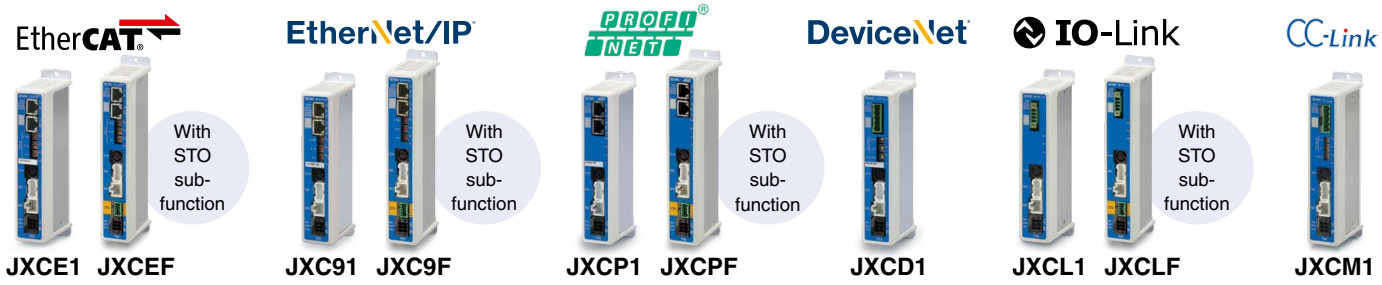

JXCE1 JXCEF JXC91 JXC9F JXCP1 JXCPF JXCD1 JXCL1 JXCLF JXCM1

◎Two types of operation command

Step no. defined operation: Operate using the preset step data in the controller.
Numerical data defined operation: The actuator operates using values such as position and speed from the PLC.

◎Numerical monitoring available

Numerical information, such as the current speed, current position, and alarm codes, can be monitored on the PLC.

◎Transition wiring of communication cables

Two communication ports are provided.

* For the DeviceNet® type and CC-Link type, transition wiring is possible using a branch connector.
* 1 to 1 in the case of IO-Link

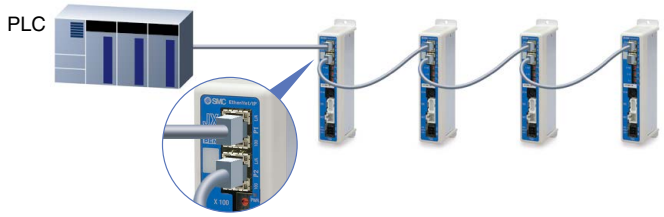

Application

Communication protocols

EtherCAT
EtherNet/IP
PROFINET
DeviceNet
IO-Link
CC-Link

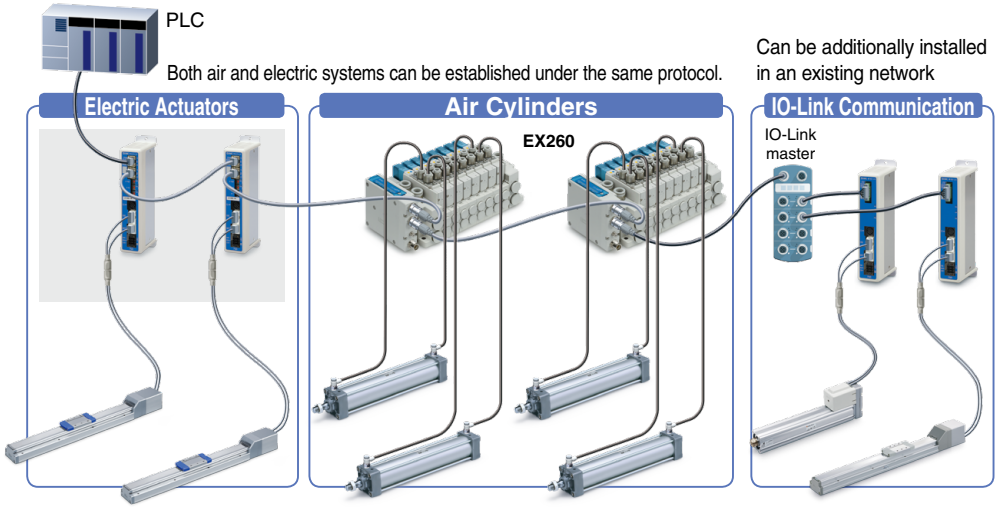

ACT 2 Controller Setting Software ACT Controller 2 From p. 5

Easy-to-use setting software ACT Controller 2 (For PC)

Various functions available in normal mode (Compared with the existing ACT Controller)

- Parameter and step data setting
- Alarm confirmation
- Waveform monitoring
- The JXC-BC writing tool
- Customizable plug-in functions

* Customers operating computers with specifications other than Windows 10/64 bit and Windows 11 should use the existing ACT Controller.

Controller with STO Sub-Function JXC□F Series

Safety function/STO, SS1-t (EN 61800-5-2)

When the STO signal is input from the safety device, after the SS1-t operation is completed, the unit shifts to the STO operation and the power supply of the motor is turned OFF.

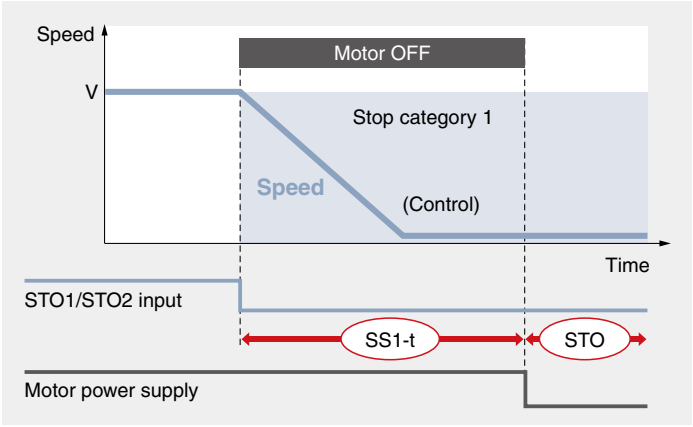

SS1-t operation: Safe Stop 1—After deceleration, a shift to the STO operation occurs.
STO operation: Safe Torque Off—The power supply of the motor is turned OFF.

External Device Connection Example

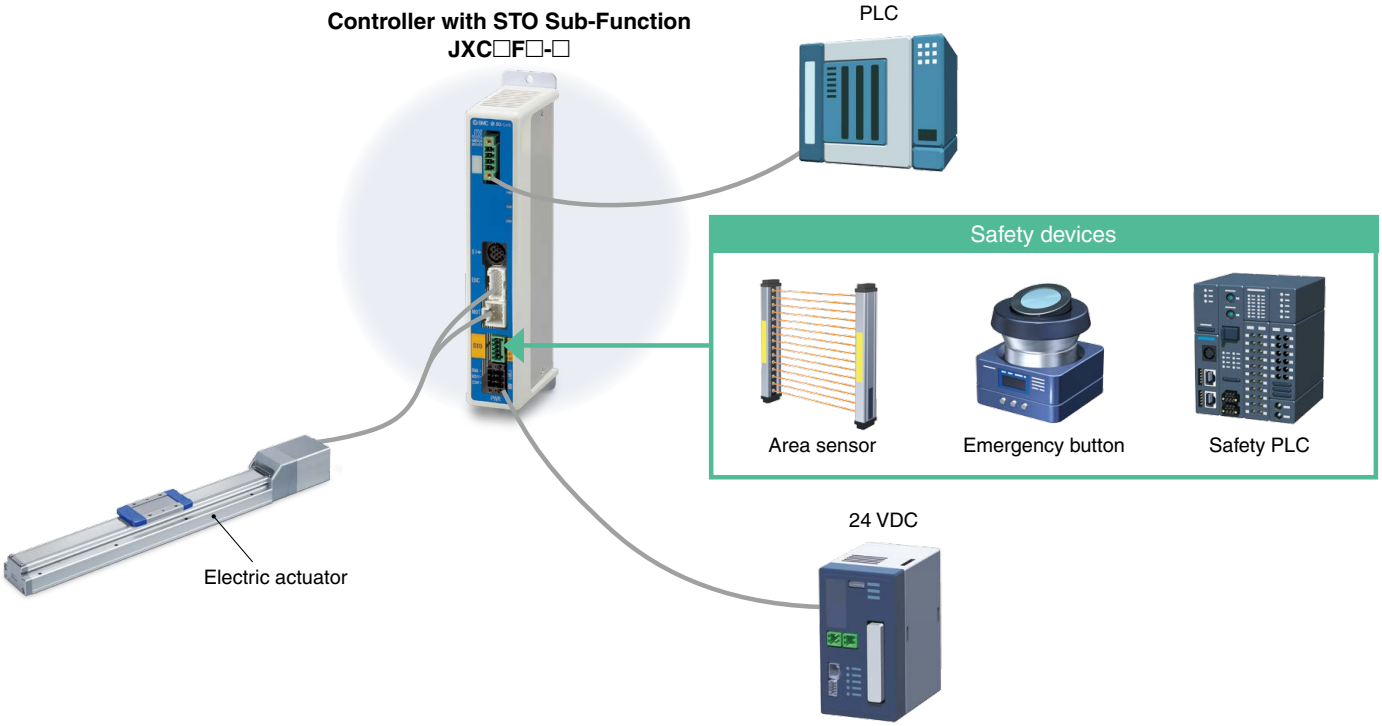

Certified by a third-party organization

Facilitates the safety designing of equipment and facilities (compliant with ISO/IEC standards)

EN 61508 SIL 3*1
EN 62061 SIL CL 3*1
EN ISO 13849-1 Cat. 3 PL e
EN 61800-5-2 STO, SS1-t

SIL (Safety Integrity Level)
A safety integrity level as defined by international standard IEC 61508/62061
There are 4 levels of safety, with the lowest being SIL 1 and the highest being SIL 4.

PL (Performance Level)
A scale used to define the capability of safety-related parts to perform a safety function as defined by international standard ISO 13849
There are 5 levels of safety function, with the lowest being PL a and the highest being PL e.

*1 The above safety integrity level is the max. value. The achievable level varies depending on the configuration and inspection method of the component. Be sure to refer to "Safety Manual: JXC#-OMY0009" for more information.

System Construction/General Purpose I/O

● High rigidity and high precision slider type

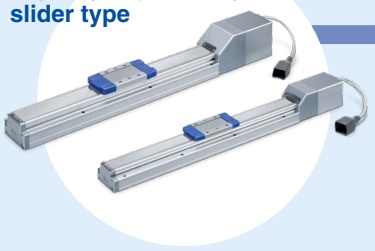

Provided by the customer

PLC

Power supply for I/O signal 24 VDC

● I/O cable p. 85

Part no.

LEC-CN5-□

● Controller*1

To Parallel I/O connector

To SI

To SI

To ENC

To MOT

● Actuator cable*1 p. 93

Robotic cable

LE-CE-□

*1 Can be included as an option. Refer to the "How to Order" page of the actuator.

Provided by the customer

Power supply for controller 24 VDC

To PWR

● Power supply plug p. 85

(Accessory)

Step data input type

JXC51/61

p. 79

● Communication cable p. 85

(3 m)

Options

● Teaching box p. 85

(With 3 m cable)

LEC-T1-3□G□

or

● Communication cable for controller setting p. 85

Communication cable : JXC-W2A-C

USB cable : LEC-W2-U

<Controller setting software/USB driver>

· Controller setting software

· USB driver (For JXC-W2A-C)

* Download from SMC's website: https://www.smcworld.com

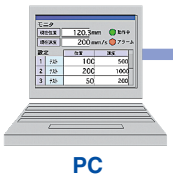

PC

● USB cable

(A-mini B type)

(0.8 m)

● Conversion cable*2 p. 85

P5062-5

(0.3 m)

The conversion cable can be used for connecting this controller to the optional teaching box [LEC-T1] offered with the LEC series.

● Conversion cable p. 85

*2 A conversion cable is also required to connect the JXC□1 series controller and the LEC□ series communication cable (LEC-W2A-C). (A conversion cable is not required for the JXC-W2A-C.)

System Construction/Fieldbus Network
(EtherCAT/EtherNet/IP™/PROFINET/DeviceNet®/IO-Link/CC-Link Direct Input Type)

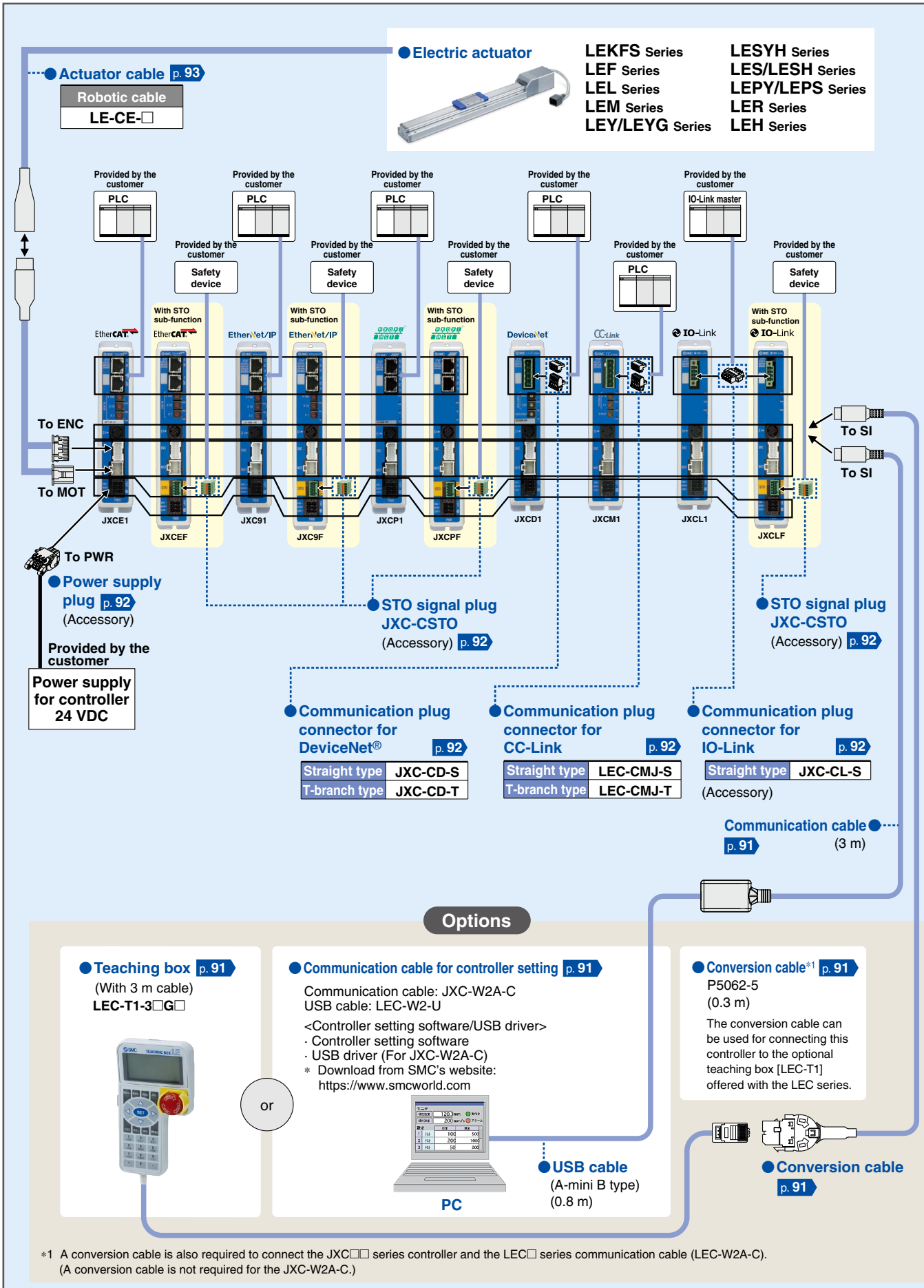

*1 A conversion cable is also required to connect the JXC□□ series controller and the LEC□ series communication cable (LEC-W2A-C).
(A conversion cable is not required for the JXC-W2A-C.)

LECSA/LECS□-T/LECY□ Series List p. 96

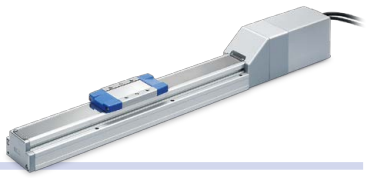

	Series		Compatible motor		Control method			Application/Function			Compatible option
			100 W	200 W	Positioning*1	Pulse	Network direct input	Synchronous*2	Pushing operation*4	Safety function STO	Setup software
Incremental Type	**LECSA** (Pulse input type/ Positioning type)		●	●	Up to 7 points ●	●					LEC-MRC2 ●
Absolute Type	**LECSB-T** (Pulse input type/ Positioning type)		●	●	Up to 255 points ●	●			*4 ●	●	LEC-MRC2 ●
	CC-Link **LECSC-T** (CC-Link direct input type)		●	●	Up to 255 points ●		CC-Link Ver. 1.10 ●				LEC-MRC2 ●
	SSCNET Ⅲ/H **LECSS-T** (SSCNET Ⅲ/H type) Compatible with Mitsubishi Electric's servo system controller network		●	●			SSCNET Ⅲ/H ●	*2 ●	*4 ●	●	LEC-MRC2 ●
	MECHATROLINK-Ⅱ **LECYM**		●	●			MECHATRO LINK-Ⅱ ●	*3 ●		●	SigmaWin+™ ●
	MECHATROLINK-Ⅲ **LECYU**		●	●			MECHATRO LINK-Ⅲ ●	*3 ●		●	SigmaWin+™ ●

*1 For positioning types, the settings need to be changed in order to use the max. set values. Setup software (MR Configurator2™) LEC-MRC2 is required.
*2 Available when a Mitsubishi motion controller is used as upper level equipment
*3 Available when a motion controller is used as upper level equipment
*4 The LECSB2-T is only applicable when the control method is positioning. The point table is used to set the pushing operation settings.
To set the pushing operation settings, an additional dedicated file (pushing operation extension file) must be downloaded separately to be used with the setup software (MR Configurator2™: LEC-MRC2□). Please download this dedicated file from the SMC website: https://www.smcworld.com
When selecting the LECSS2-T, combine it with upper level equipment (such as the Simple Motion module manufactured by Mitsubishi Electric Corporation) which has a pushing operation function.
** For customer-provided PLC and motion controller setting and usage instructions, confirm with the retailer or manufacturer.

Gain adjustment using auto tuning

Auto-tuning function

- Controls the difference between the command value and the actual action

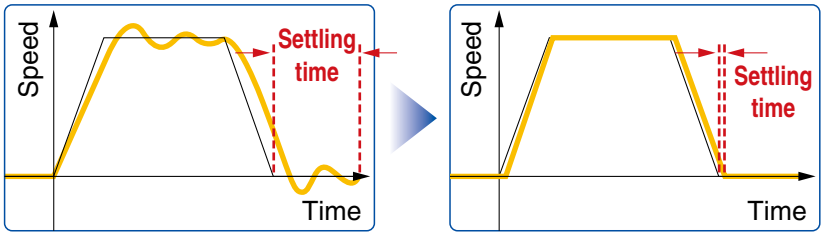

Vibration suppression control function

- Automatically suppresses low-frequency machine vibrations (1 to 100 Hz)

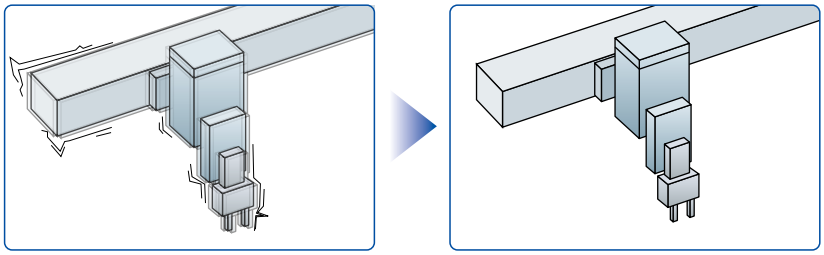

With display setting function

One-touch adjustment button
One-touch servo adjustment

Display
Display the monitor, parameters, and alarm.

Settings
Set the parameters, monitor display, etc., with push buttons.

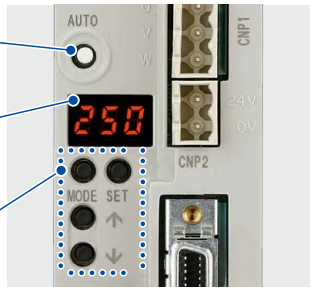

LECSA

Display
Display the monitor, parameters, and alarm.

Settings
Set the parameters, monitor display, etc., with push buttons.

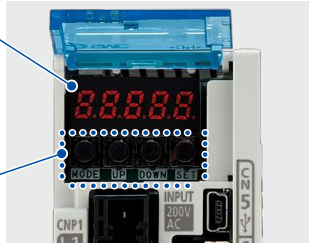

(With the front cover opened)
LECSB-T

Display
Display the communication status with the driver, the alarm, and the point table no.

Settings
Control the Baud rate, station number, and the occupied station count.

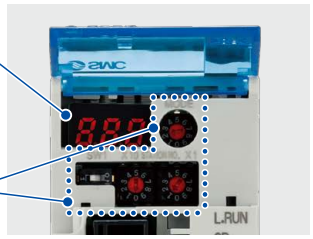

(With the front cover opened)
LECSC-T

Display
Display the communication status with the driver and the alarm.

Settings
Switches for axis setting, control axis deactivation, switching to the test operation, etc.

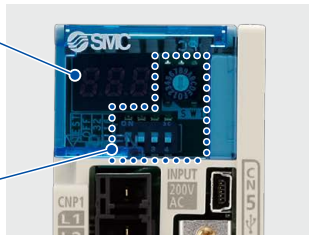

LECSS2-T

Settings
Switches for station address, communication speed, number of transmission bytes, etc.

Display
Display the driver status and alarm.

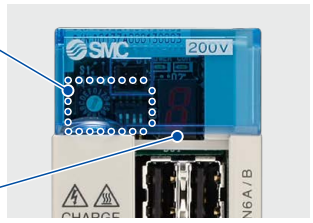

LECYM

Settings
Switches for station address, number of transmission bytes, etc.

Display
Display the driver status and alarm.

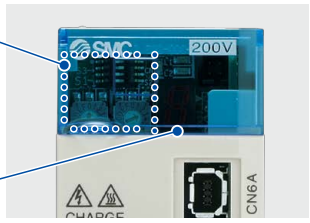

LECYU

System Construction

Incremental encoder compatible *LECSA Series*
(Pulse input type/Positioning type)

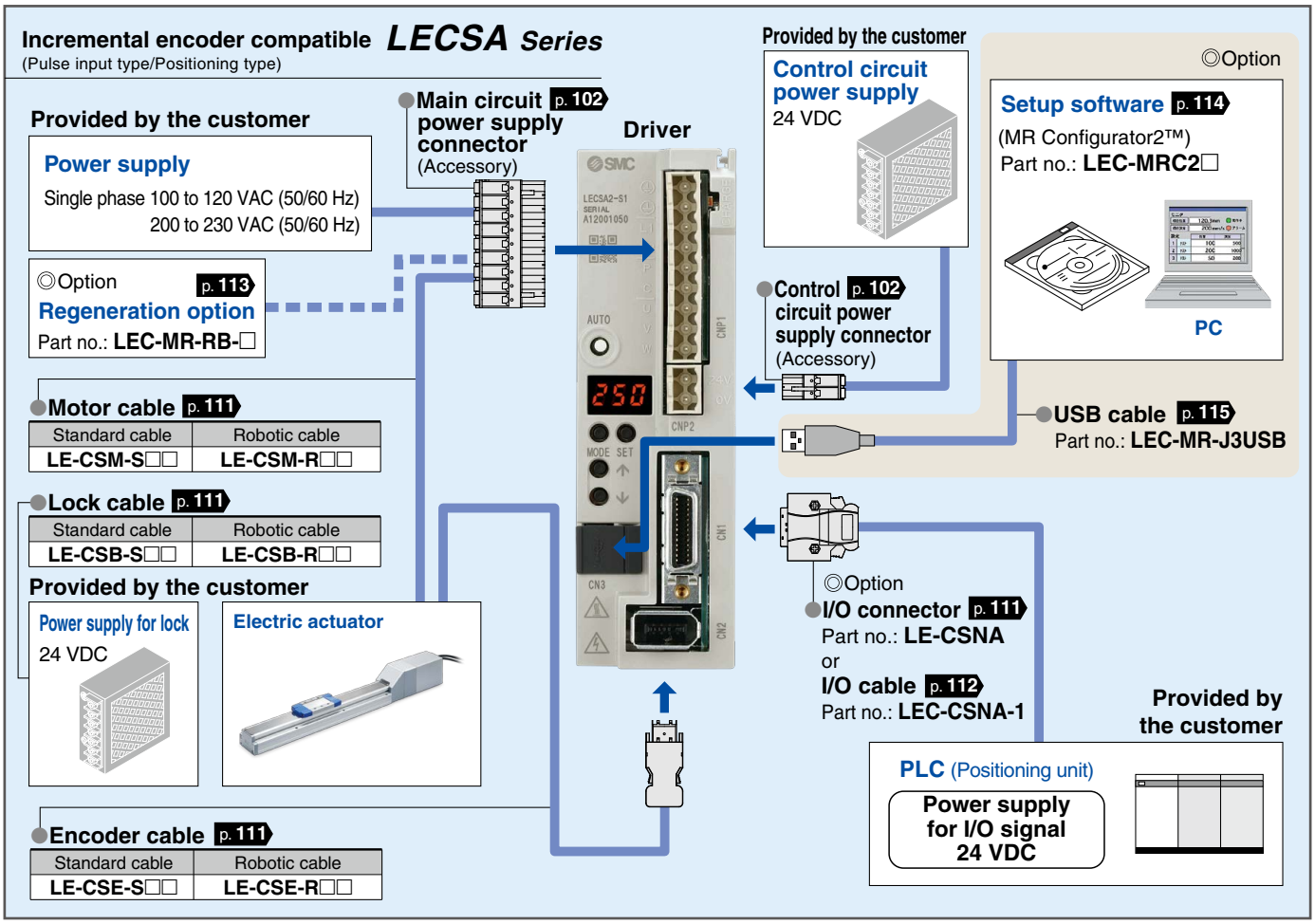

Absolute encoder compatible *LECSB-T Series*
(Pulse input type/Positioning type)

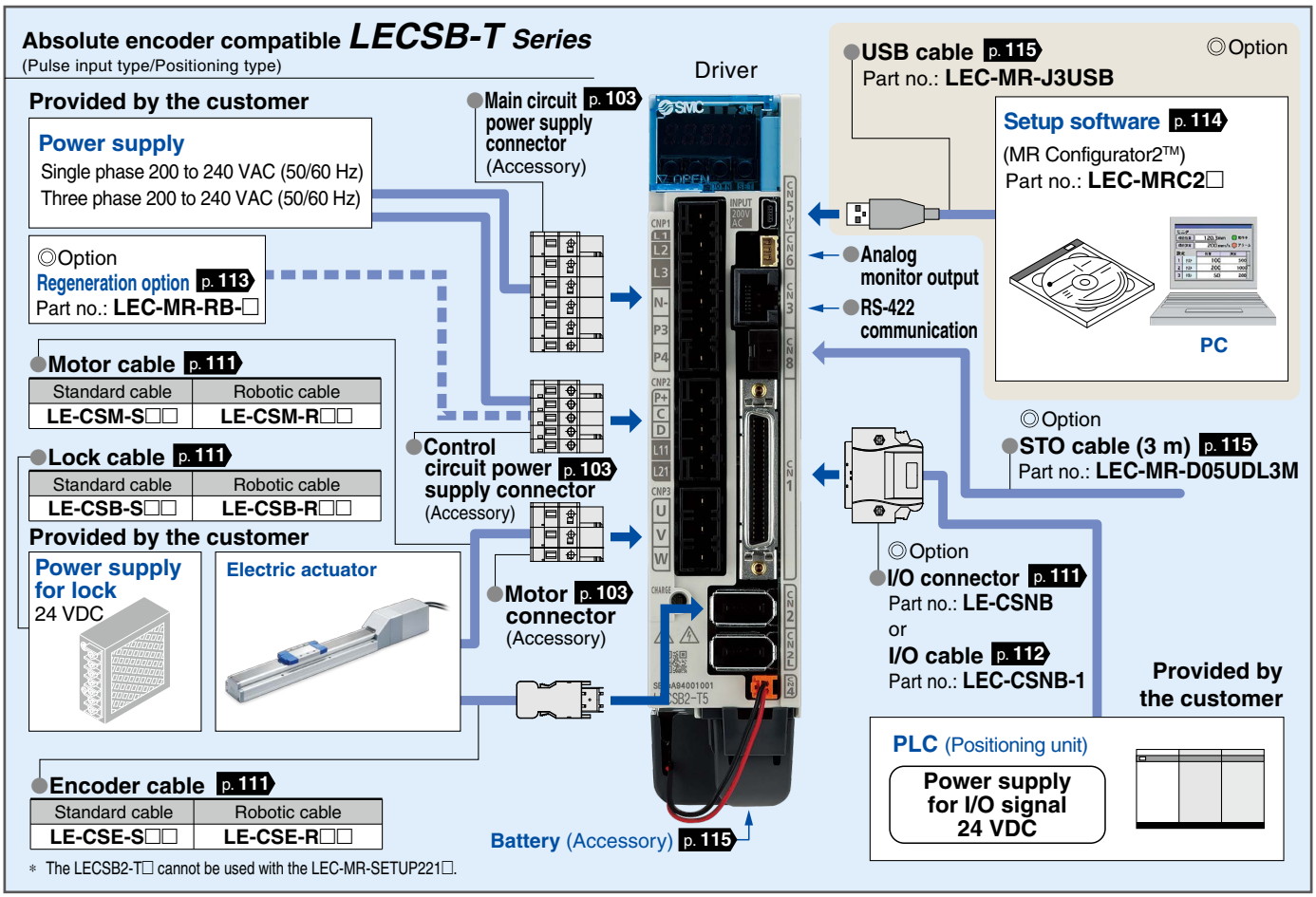

∗ The LECSB2-T□ cannot be used with the LEC-MR-SETUP221□.

System Construction

Absolute encoder compatible *LECSC-T Series*
(CC-Link direct input type)

Driver

Provided by the customer

Power supply
Single phase 200 to 230 VAC (50/60 Hz)
Three phase 200 to 230 VAC (50/60 Hz)

◎Option
Regeneration option p. 113
Part no.: **LEC-MR-RB-□**

Motor cable p. 111

Standard cable	Robotic cable
LE-CSM-S□□	LE-CSM-R□□

Lock cable p. 111

Standard cable	Robotic cable
LE-CSB-S□□	LE-CSB-R□□

Provided by the customer

Power supply for lock
24 VDC

Electric actuator

Encoder cable p. 111

Standard cable	Robotic cable
LE-CSE-S□□	LE-CSE-R□□

Main circuit power supply connector p. 104
(Accessory)

Control circuit power supply connector p. 104
(Accessory)

Motor connector p. 104
(Accessory)

Battery (Accessory) p. 115

USB cable p. 115
Part no.: **LEC-MR-J3USB**

◎Option
Setup software p. 114
(MR Configurator2™)
Part no.: **LEC-MRC2□**

PC

RS-422 communication

CC-Link connector*1
(Accessory)

◎Option
I/O connector p. 111
Part no.: **LE-CSNA**
or
I/O cable p. 112
Part no.: **LEC-CSNA-1**

Provided by the customer

PLC (CC-Link master unit)
Power supply for I/O signal 24 VDC

＊ The LECSC2-T□ cannot be used with the LEC-MR-SETUP221□.　＊1 Product number: K05A50230600 manufactured by Mitsubishi Electric System & Service Co., Ltd.

Absolute encoder compatible *LECSS-T Series*
SSCNETⅢ/H
SERVO SYSTEM CONTROLLER NETWORK

Driver

Provided by the customer

Power supply
Single phase 200 to 240 VAC (50/60 Hz)
Three phase 200 to 240 VAC (50/60 Hz)

◎Option
Regeneration option p. 113
Part no.: **LEC-MR-RB-□**

Motor cable p. 111

Standard cable	Robotic cable
LE-CSM-S□□	LE-CSM-R□□

Lock cable p. 111

Standard cable	Robotic cable
LE-CSB-S□□	LE-CSB-R□□

Provided by the customer

Power supply for lock
24 VDC

Electric actuator

Encoder cable p. 111

Standard cable	Robotic cable
LE-CSE-S□□	LE-CSE-R□□

Main circuit power supply connector p. 103
(Accessory)

Control circuit power supply connector p. 103
(Accessory)

Motor connector p. 103
(Accessory)

Battery (Accessory) p. 115

USB cable p. 115
Part no.: **LEC-MR-J3USB**

◎Option
Setup software p. 114
(MR Configurator2™)
Part no.: **LEC-MRC2□**

PC

CN3

◎Option
I/O connector p. 111
Part no.: **LE-CSNS**
or
I/O cable p. 112
Part no.: **LEC-CSNS-1**

◎Option
STO cable (3 m) p. 115
Part no.: **LEC-MR-D05UDL3M**

CN1A

◎Option
SSCNETⅢ optical cable p. 112
Part no.: **LE-CSS-□**

CN1B

CN1A

Provided by the customer

PLC (Positioning unit/Motion controller)
Power supply for I/O signal 24 VDC

＊ The LECSS2-T□ cannot be used with the LEC-MR-SETUP221□.

System Construction

Absolute encoder compatible *LECYM Series*
MECHATROLINK-Ⅱ type

Provided by the customer
Power supply
Single phase 200 to 230 VAC (50/60 Hz)
Three phase 200 to 230 VAC (50/60 Hz)

Provided by the customer
External regenerative resistor p. 119

∗ If an external regenerative resistor is required, it should be provided by the customer. For external regenerative resistor selection, refer to the compatible actuator catalog.

Main circuit power supply connector (Accessory) p. 119

Driver

◎Option
MECHATROLINK-Ⅱ cable p. 124
Part no.: **LEC-CYM-□**

2nd driver

Provided by the customer
PLC (Positioning unit/Motion controller)
Power supply for I/O signal 24 VDC

Motor cable p. 122

Standard cable	Robotic cable
LE-CYM-S□A-□	LE-CYM-R□A-□

Motor cable for lock option p. 122

Standard cable	Robotic cable
LE-CYB-S□A-□	LE-CYB-R□A-□

Provided by the customer
Power supply for lock
24 VDC

Electric actuator

Motor p. 119 connector (Accessory)

◎Option
USB cable p. 125
Part no.: **LEC-JZ-CVUSB**

Setup software p. 125
(SigmaWin+™)
Please download it via our website.
PC

∗ Order the USB cable (Part no.: **LEC-JZ-CVUSB**) separately to use this software.

◎Option
I/O p. 123 connector
Part no.: **LE-CYNA**
or
I/O cable p. 123
Part no.: **LEC-CSNA-1**

Encoder cable p. 122

Standard cable	Robotic cable
LE-CYE-S□A	LE-CYE-R□A

Cable for safety function device (3 m) p. 125
Part no.: **LEC-JZ-CVSAF**

Absolute encoder compatible *LECYU Series*
MECHATROLINK-Ⅲ type

Provided by the customer
Power supply
Single phase 200 to 230 VAC (50/60 Hz)
Three phase 200 to 230 VAC (50/60 Hz)

Provided by the customer
External regenerative resistor p. 119

∗ If an external regenerative resistor is required, it should be provided by the customer. For external regenerative resistor selection, refer to the compatible actuator catalog.

Main circuit power supply connector (Accessory) p. 119

Driver

◎Option
MECHATROLINK-Ⅲ cable p. 124
Part no.: **LEC-CYU-□**

2nd driver

Provided by the customer
PLC (Positioning unit/Motion controller)
Power supply for I/O signal 24 VDC

Motor cable p. 122

Standard cable	Robotic cable
LE-CYM-S□A-□	LE-CYM-R□A-□

Motor cable for lock option p. 122

Standard cable	Robotic cable
LE-CYB-S□A-□	LE-CYB-R□A-□

Provided by the customer
Power supply for lock
24 VDC

Electric actuator

Motor p. 119 connector (Accessory)

◎Option
USB cable p. 125
Part no.: **LEC-JZ-CVUSB**

Setup software p. 125
(SigmaWin+™)
Please download it via our website.
PC

∗ Order the USB cable (Part no.: **LEC-JZ-CVUSB**) separately to use this software.

◎Option
I/O p. 123 connector
Part no.: **LE-CYNA**
or
I/O cable p. 123
Part no.: **LEC-CSNA-1**

Encoder cable p. 122

Standard cable	Robotic cable
LE-CYE-S□A	LE-CYE-R□A

Cable for safety function device (3 m) p. 125
Part no.: **LEC-JZ-CVSAF**

CONTENTS

Electric Actuator

High Rigidity and High Precision Slider Type *LEKFS Series*

High Rigidity and High Precision Slider Type *LEKFS Series* Battery-less Absolute (Step Motor 24 VDC)

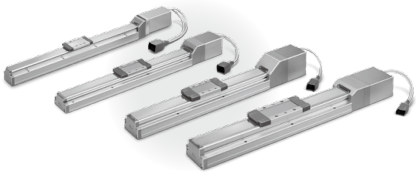

Model Selection ..... p. 21
How to Order ..... p. 37
Specifications ..... p. 39
Weight ..... p. 39
Construction ..... p. 40
Dimensions ..... p. 42

High Rigidity and High Precision Slider Type/Ball Screw Drive *LEKFS Series* AC Servo Motor *LECS□ Series*

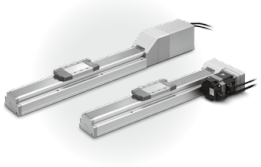

Model Selection ..... p. 27
How to Order ..... p. 50
Specifications ..... p. 51
Weight ..... p. 51
Construction ..... p. 52
Dimensions ..... p. 54

High Rigidity and High Precision Slider Type/Ball Screw Drive *LEKFS Series* AC Servo Motor *LECY□ Series*

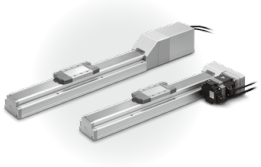

Model Selection ..... p. 35
How to Order ..... p. 60
Specifications ..... p. 61
Weight ..... p. 61
Construction ..... p. 62
Dimensions ..... p. 64

Auto Switch Mounting ..... p. 70
Specific Product Precautions ..... p. 74
Battery-less Absolute Encoder Type Specific Product Precautions ..... p. 76

Controllers *JXC□ Series*

Controller (Step Data Input Type) *JXC51/61 Series* Battery-less Absolute (Step Motor 24 VDC)

How to Order ..... p. 79
Specifications ..... p. 79
Dimensions ..... p. 81
Options ..... p. 85
Actuator Cable ..... p. 93

Step Motor Controller *JXCE□/9□/P□/D1/L□/M1 Series* Battery-less Absolute (Step Motor 24 VDC)

How to Order ..... p. 86
Specifications ..... p. 87
Dimensions ..... p. 88
Options ..... p. 91
Actuator Cable ..... p. 93

JXC51/61/E□/9□/P□/D1/L□/M1 Series Precautions Relating to Differences in Controller Versions ..... p. 94

AC Servo Motor Drivers *LECSA/LECS□-T/LECY□ Series*

AC Servo Motor Driver *LECSA/LECS□-T Series*

How to Order ..... p. 97
Dimensions ..... p. 98
Specifications ..... p. 100
Options ..... p. 111

AC Servo Motor Driver *LECYM/LECYU Series*

How to Order ..... p. 116
Dimensions ..... p. 116
Specifications ..... p. 117
Options ..... p. 122

Specific Product Precautions ..... p. 126

CE/UKCA/UL-compliance List ..... p. 128

Electric Actuator

High Rigidity and High Precision Slider Type

Slider Type *LEKFS Series*

Battery-less Absolute (Step Motor 24 VDC)

p. 37

AC Servo Motor

p. 50

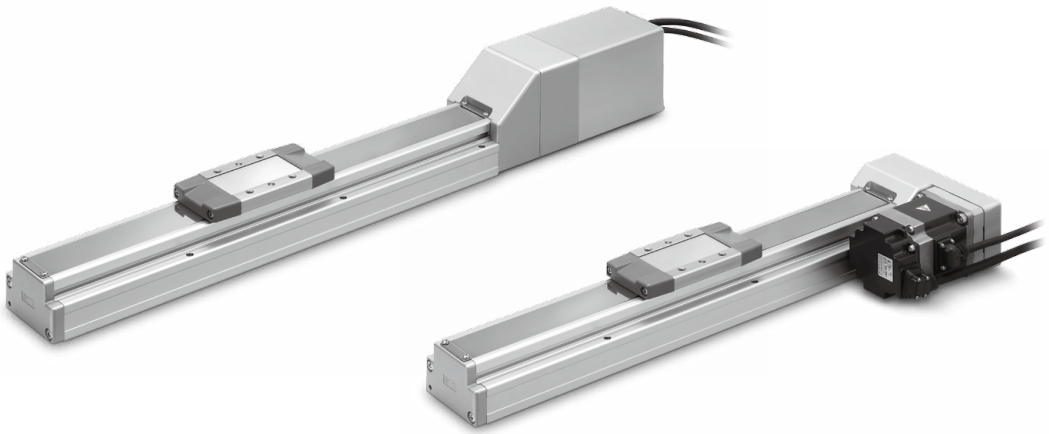

Controllers p. 78
AC Servo Motor Drivers p. 96

Model Selection

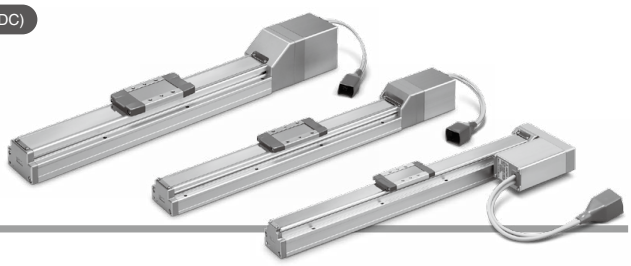

Selection Procedure

Step 1 Check the work load–speed. → **Step 2** Check the cycle time. → **Step 3** Check the allowable moment.

Selection Example

Operating conditions

- Workpiece mass: 5 [kg]
- Speed: 300 [mm/s]
- Acceleration/Deceleration: 3000 [mm/s^2]
- Stroke: 200 [mm]
- Mounting orientation: Horizontal upward
- Workpiece mounting condition:

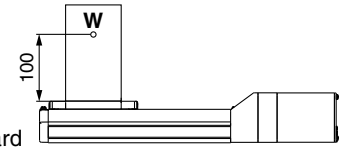

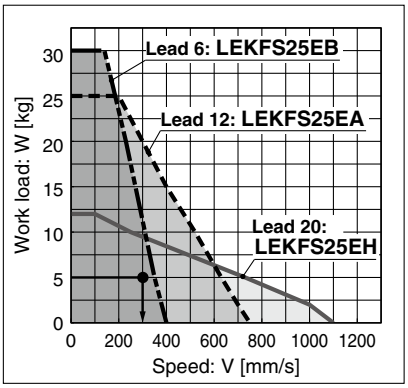

<Speed–Work load graph> (LEKFS25/Step motor)

Step 1 Check the work load–speed. <Speed–Work load graph> (pages 22, 23)

Select a model based on the workpiece mass and speed while referencing the speed–work load graph.

Selection example) The **LEKFS25EB-200** can be temporarily selected as a possible candidate based on the graph shown on the right side.

Step 2 Check the cycle time.

Calculate **the cycle time** using the following calculation method.

Cycle time:

T can be found from the following equation.

$$T = T1 + T2 + T3 + T4 \text{ [s]}$$

- T1: Acceleration time and T3: Deceleration time can be found by the following equation.

$$T1 = V/a1 \text{ [s]} \qquad T3 = V/a2 \text{ [s]}$$

- T2: Constant speed time can be found from the following equation.

$$T2 = \frac{L - 0.5 \cdot V \cdot (T1 + T3)}{V} \text{ [s]}$$

- T4: Settling time varies depending on the conditions such as motor types, load and in position of the step data. Therefore, calculate the settling time while referencing the following value.

$$T4 = 0.2 \text{ [s]}$$

Calculation example)
T1 to T4 can be calculated as follows.

$T1 = V/a1 = 300/3000 = 0.1$ [s],

$T3 = V/a2 = 300/3000 = 0.1$ [s]

$$T2 = \frac{L - 0.5 \cdot V \cdot (T1 + T3)}{V} = \frac{200 - 0.5 \cdot 300 \cdot (0.1 + 0.1)}{300} = 0.57 \text{ [s]}$$

$T4 = 0.2$ [s]

The cycle time can be found as follows.

$T = T1 + T2 + T3 + T4$
$= 0.1 + 0.57 + 0.1 + 0.2$
$=$ **0.97 [s]**

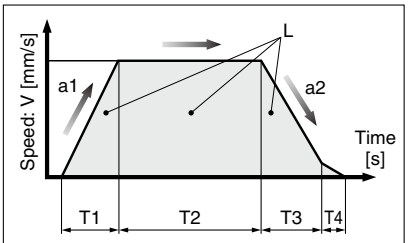

L : Stroke [mm] ··· (Operating condition)
V : Speed [mm/s] ··· (Operating condition)
a1: Acceleration [mm/s^2] ··· (Operating condition)
a2: Deceleration [mm/s^2] ··· (Operating condition)

T1: Acceleration time [s]
Time until reaching the set speed
T2: Constant speed time [s]
Time while the actuator is operating at a constant speed
T3: Deceleration time [s]
Time from the beginning of the constant speed operation to stop
T4: Settling time [s]
Time until positioning is completed

Step 3 Check the allowable moment. <Static allowable moment> (page 26) <Dynamic allowable moment> (pages 24, 25)

Confirm the moment that applies to the actuator is within the allowable range for both static and dynamic conditions.

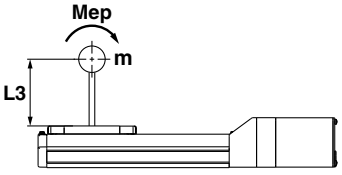

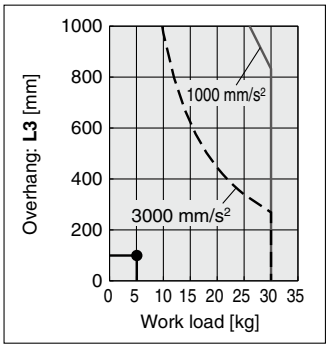

Based on the above calculation result, the LEKFS25EB-200 should be selected.

∗ If the step motor and servo motors do not meet your specifications, also consider the AC servo specification.

Speed–Work Load Graph (Guide)
For Battery-less Absolute (Step Motor 24 VDC), In-line Motor Type

* The following graphs show the values when the moving force is 100%.

LEKFS16/Ball Screw Drive

Horizontal

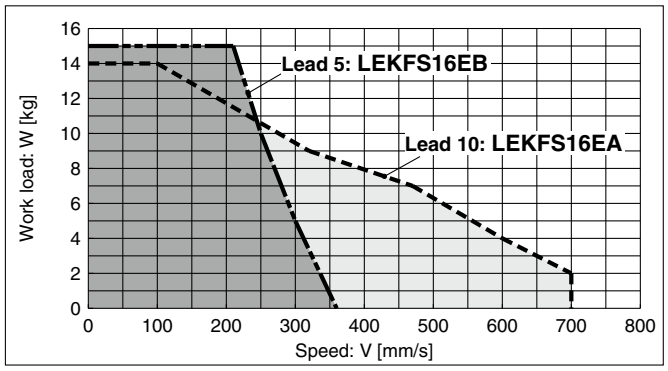

Vertical

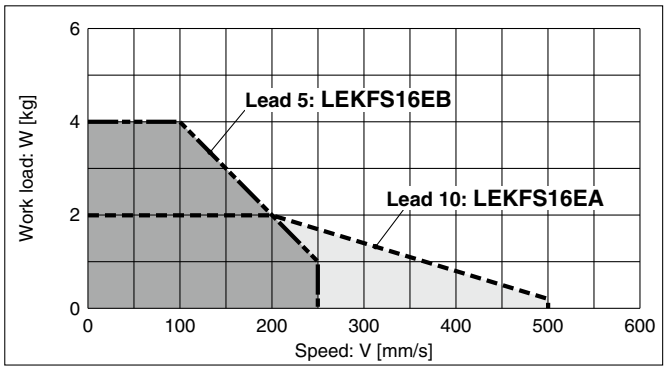

LEKFS25/Ball Screw Drive

Horizontal

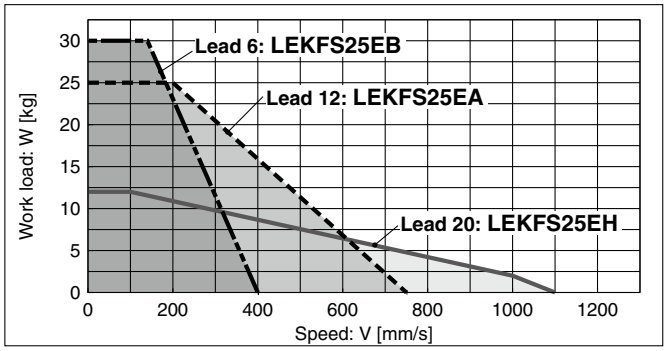

Vertical

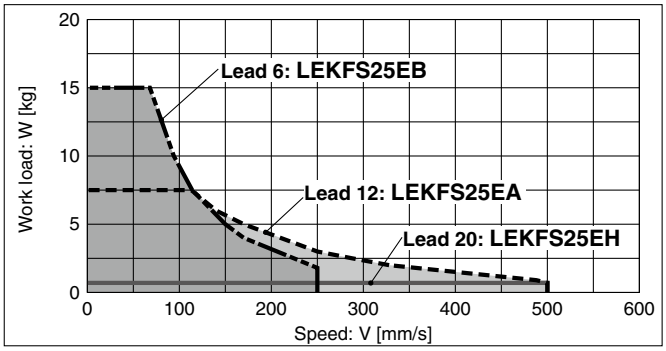

LEKFS32/Ball Screw Drive

Horizontal

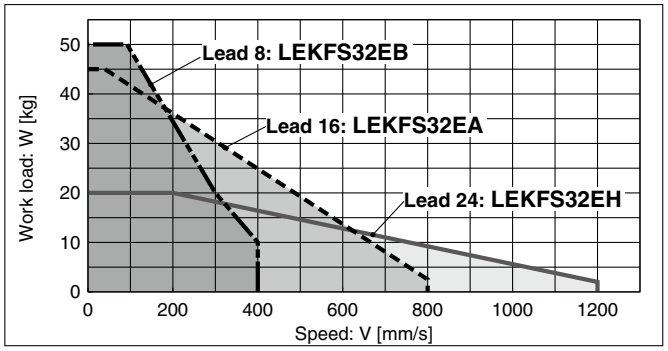

Vertical

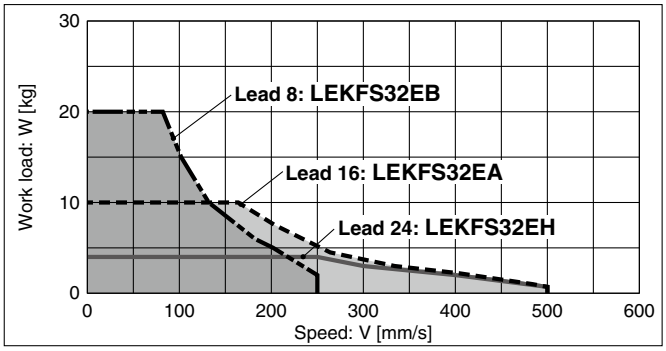

LEKFS40/Ball Screw Drive

Horizontal

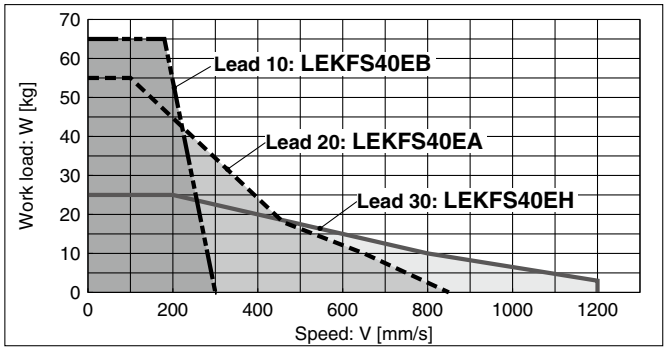

Vertical

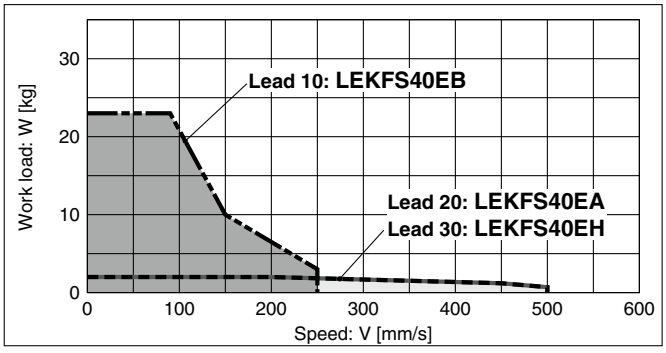

Speed–Work Load Graph (Guide)
For Battery-less Absolute (Step Motor 24 VDC), Parallel Motor Type

* The following graphs show the values when the moving force is 100%.

LEKFS16(L/R)/Ball Screw Drive

Horizontal

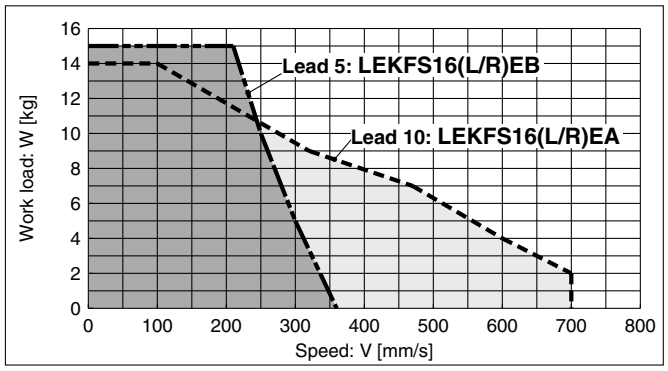

Vertical

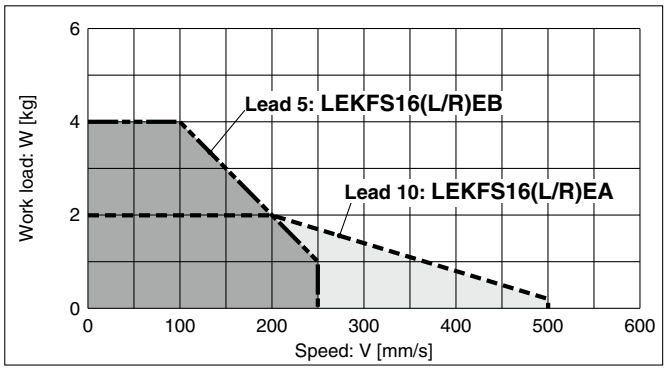

LEKFS25(L/R)/Ball Screw Drive

Horizontal

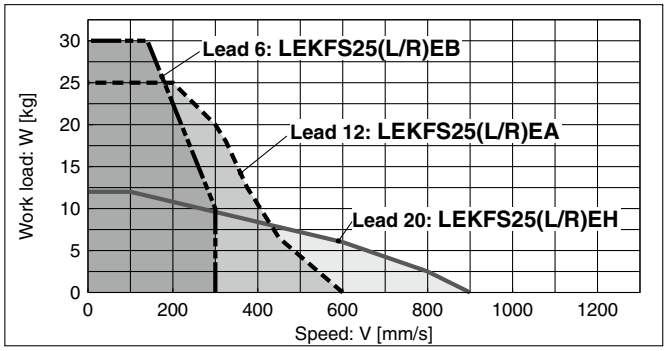

Vertical

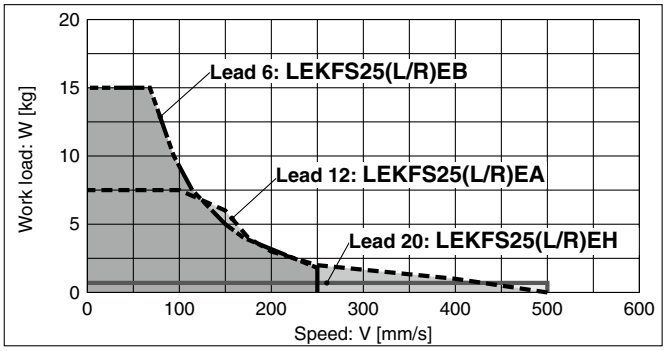

LEKFS32(L/R)/Ball Screw Drive

Horizontal

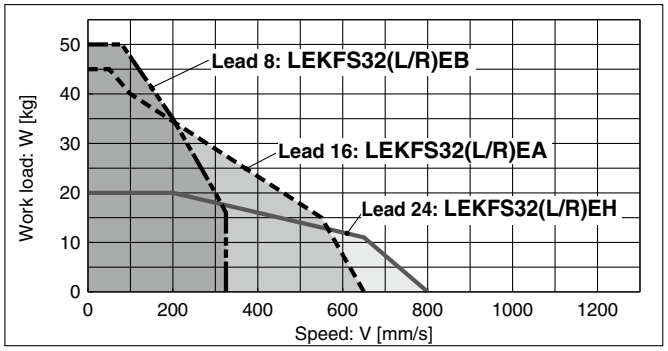

Vertical

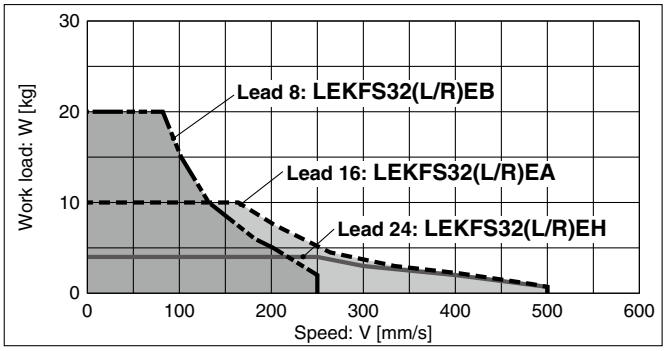

LEKFS40(L/R)/Ball Screw Drive

Horizontal

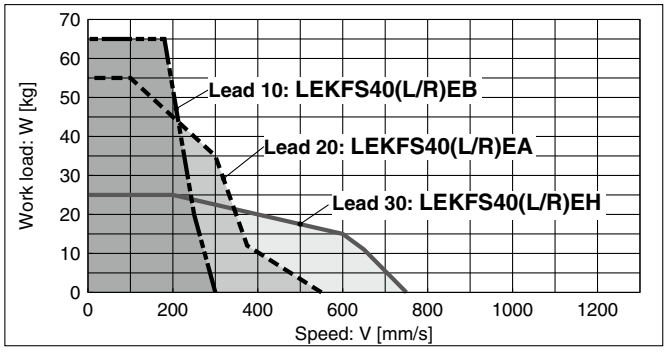

Vertical

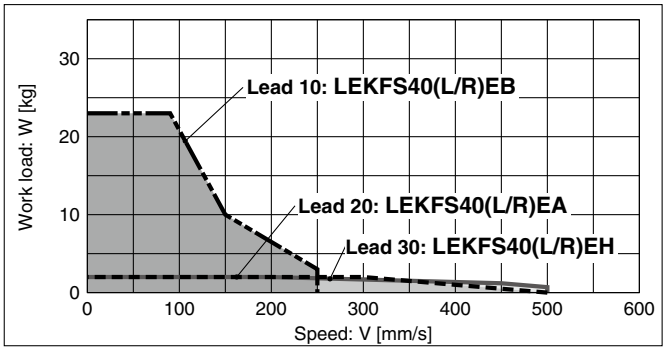

Dynamic Allowable Moment

* These graphs show the amount of allowable overhang (guide unit) when the center of gravity of the workpiece overhangs in one direction. When selecting the overhang, refer to the "Calculation of Guide Load Factor" or the Electric Actuator Model Selection Software for confirmation: https://www.smcworld.com

Acceleration/Deceleration ——1000 mm/s² – – –3000 mm/s²

Orientation	Load overhanging direction **m** : Work load [kg] **Me**: Allowable moment [N·m] **L** : Overhang to the work load center of gravity [mm]		Model LEKFS16	LEKFS25	LEKFS32	LEKFS40
Horizontal/Bottom	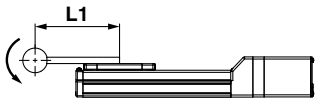	X	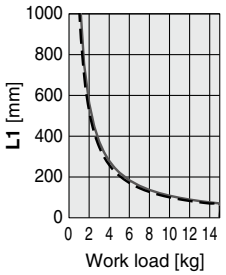	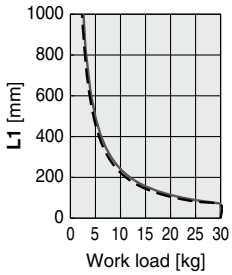	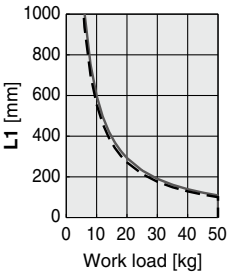	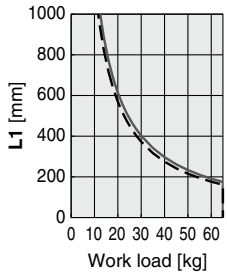
	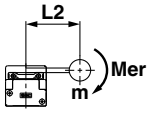	Y	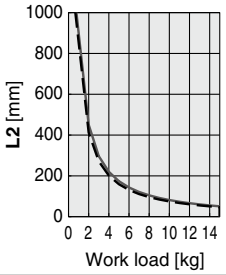	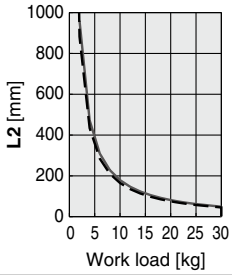	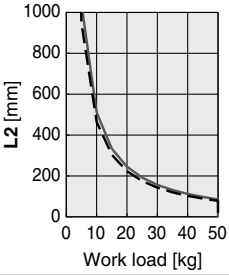	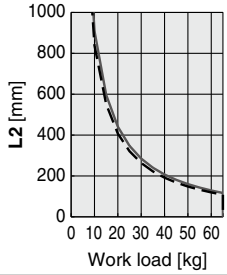
	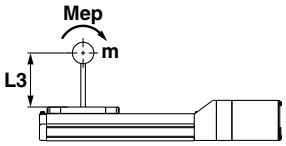 * Acceleration/deceleration of LEKF32 and LEKF40: Calculate the overhang for the work load at 1000 mm/s² based on the model selection software.	Z	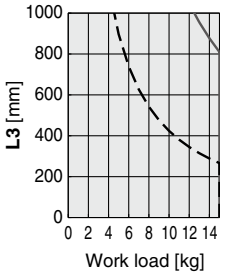	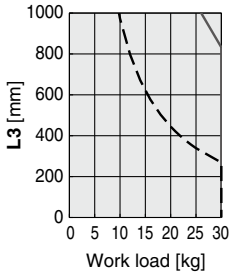	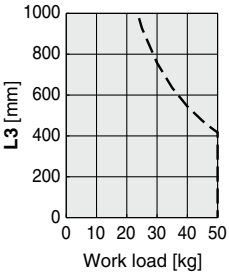	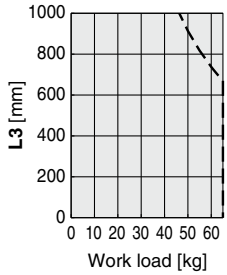
Wall	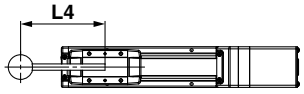	X	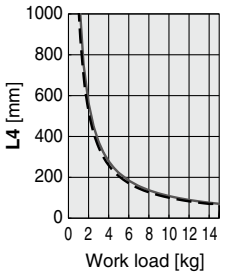	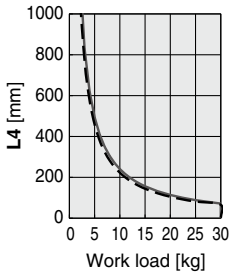	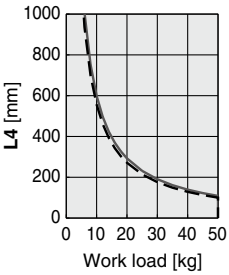	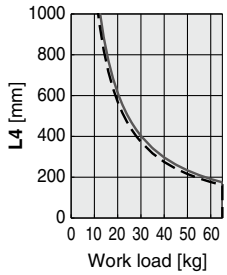
	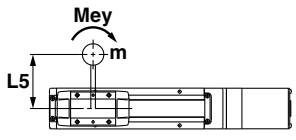 * Acceleration/deceleration of LEKF32 and LEKF40: Calculate the overhang for the work load at 1000 mm/s² based on the model selection software.	Y	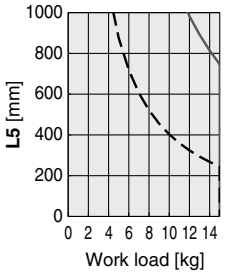	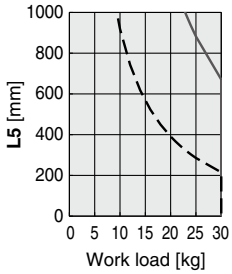	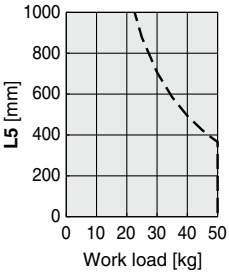	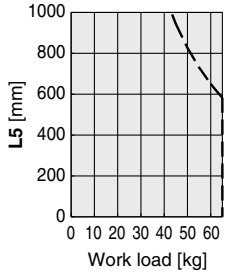
	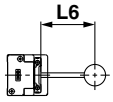	Z	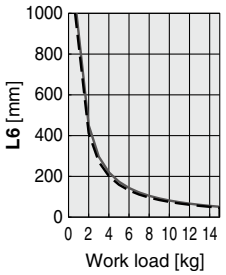	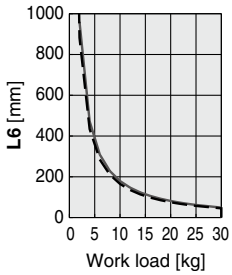	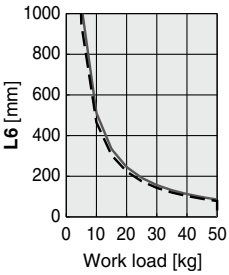	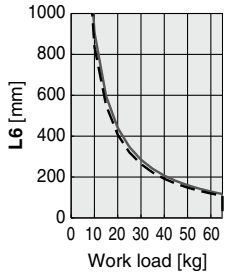

Dynamic Allowable Moment

* These graphs show the amount of allowable overhang (guide unit) when the center of gravity of the workpiece overhangs in one direction. When selecting the overhang, refer to the "Calculation of Guide Load Factor" or the Electric Actuator Model Selection Software for confirmation: https://www.smcworld.com

Acceleration/Deceleration ——1000 mm/s² – – –3000 mm/s²

Orientation	Load overhanging direction **m** : Work load [kg] **Me**: Allowable moment [N·m] **L** : Overhang to the work load center of gravity [mm]		Model LEKFS16	LEKFS25	LEKFS32	LEKFS40
Vertical	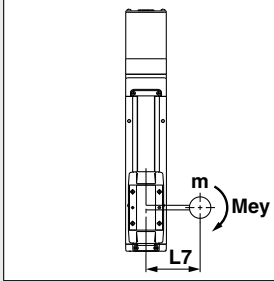	Y	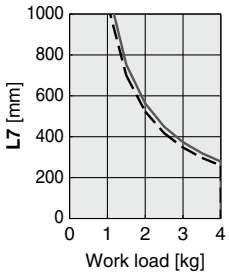	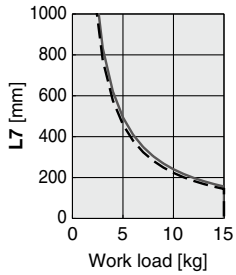	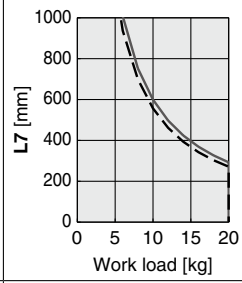	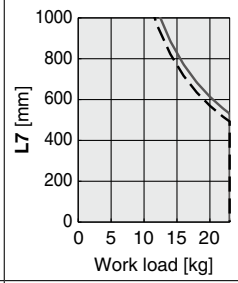
	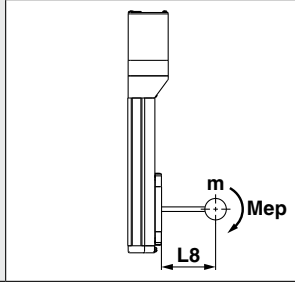	Z	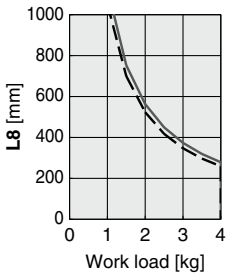	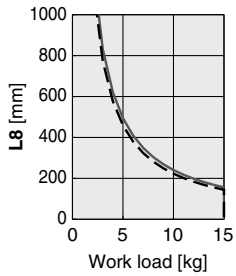	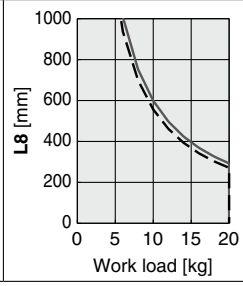	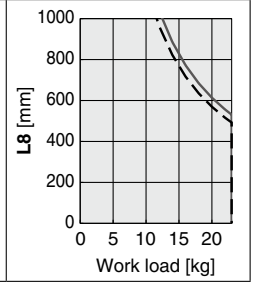

Calculation of Guide Load Factor

1. Decide operating conditions.
   Model: LEKFS
   Size: 25/32/40
   Mounting orientation: Horizontal/Bottom/Wall/Vertical
   Acceleration [mm/s²]: **a**
   Work load [kg]: **m**
   Work load center position [mm]: **Xc/Yc/Zc**
2. Select the target graph while referencing the model, size, and mounting orientation.
3. Based on the acceleration and work load, find the overhang [mm]: **Lx/Ly/Lz** from the graph.
4. Calculate the load factor for each direction.
   α**x = Xc/Lx**, α**y = Yc/Ly**, α**z = Zc/Lz**
5. Confirm the total of α**x**, α**y**, and α**z** is 1 or less.
   α**x** + α**y** + α**z** ≤ **1**
   When 1 is exceeded, please consider a reduction of acceleration and work load, or a change of the work load center position and series.

Mounting orientation

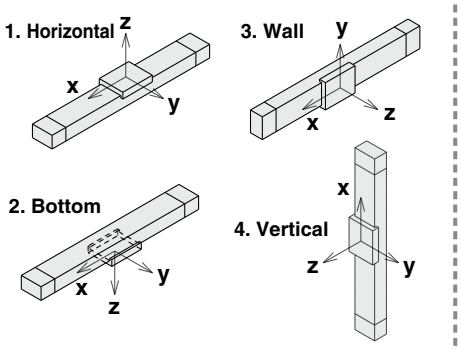

Example

1. Operating conditions
   Model: LEKFS40
   Size: 40
   Mounting orientation: Horizontal
   Acceleration [mm/s²]: 3000
   Work load [kg]: 20
   Work load center position [mm]: **Xc = 0**, **Yc = 50**, **Zc = 200**
2. Select the graphs for horizontal of the LEKFS40 on page 24.
3. **Lx = 570 mm**, **Ly = 400 mm**, **Lz = 1000 mm**
4. The load factor for each direction can be found as follows.
   α**x = 0/570 = 0**
   α**y = 50/400 = 0.125**
   α**z = 200/1000 = 0.2**
5. α**x** + α**y** + α**z = 0.325** ≤ **1**

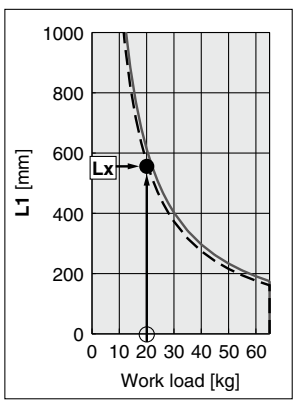

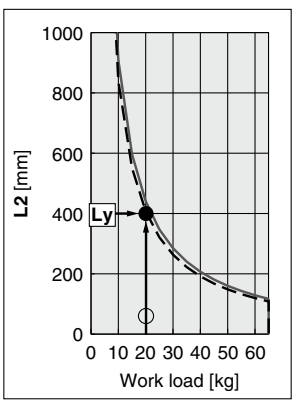

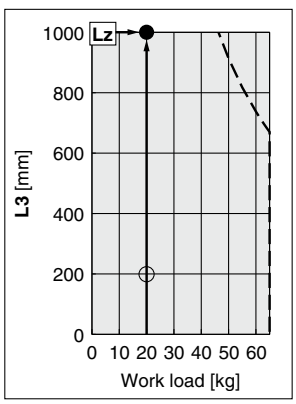

* Acceleration/deceleration of LEKF32 and LEKF40: Calculate the overhang for the work load at 1000 mm/s² based on the model selection software.

Table Accuracy (Reference Value)

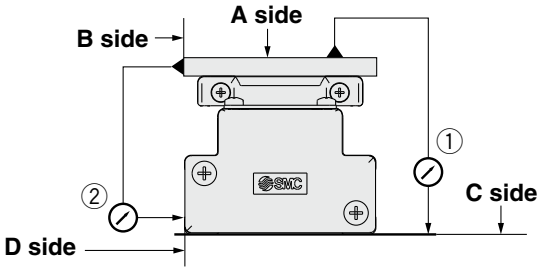

Model	Traveling parallelism [mm] (Every 300 mm)	
	① C side traveling parallelism to A side	② D side traveling parallelism to B side
LEKFS16	0.04	0.02
LEKFS25	0.04	0.02
LEKFS32	0.04	0.02
LEKFS40	0.04	0.02

∗ Traveling parallelism does not include the mounting surface accuracy.

Table Displacement (Reference Value)

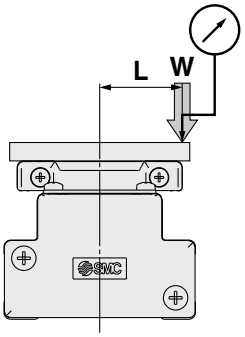

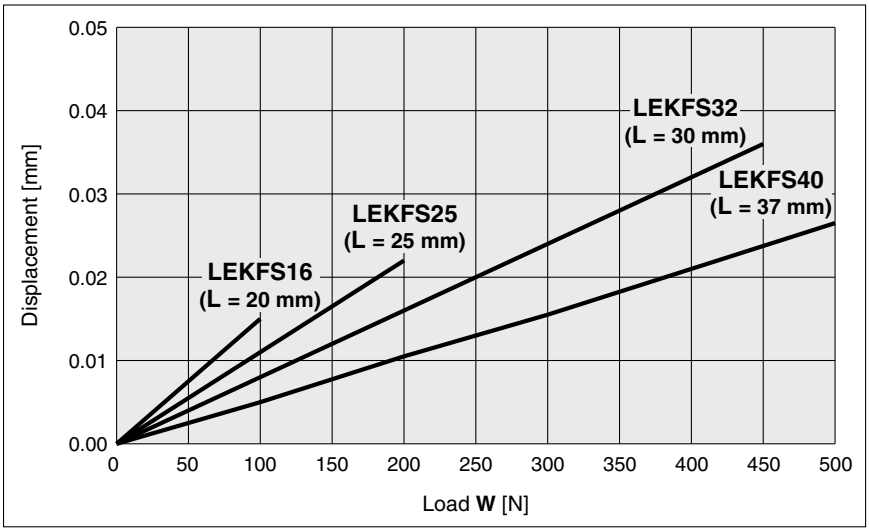

∗ This displacement is measured when a 15 mm aluminum plate is mounted and fixed on the table.

Static Allowable Moment∗1

Model	LEKFS16	LEKFS25	LEKFS32	LEKFS40
Pitching [N·m]	20	61	141	264
Yawing [N·m]	20	70	141	264
Rolling [N·m]	35	115	290	473

∗1 The static allowable moment is the amount of static moment which can be applied to the actuator when it is stopped.
If the product is exposed to impact or repeated load, be sure to take adequate safety measures when using the product.

Model Selection

LEKFS Series ▶ p. 50 LECY□ Series ▶ p. 60

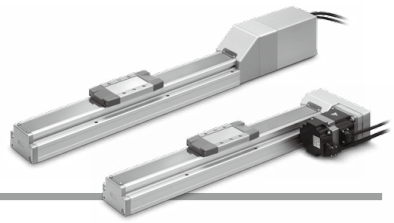

Selection Procedure

Step 1 Check the work load–speed. → **Step 2** Check the cycle time. → **Step 3** Check the allowable moment.

Selection Example

Operating conditions

- Workpiece mass: 45 [kg]
- Speed: 300 [mm/s]
- Acceleration/Deceleration: 3000 [mm/s²]
- Stroke: 200 [mm]
- Mounting position: Horizontal upward
- Workpiece mounting condition:

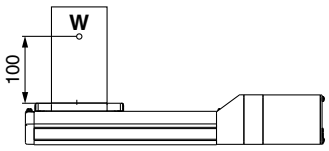

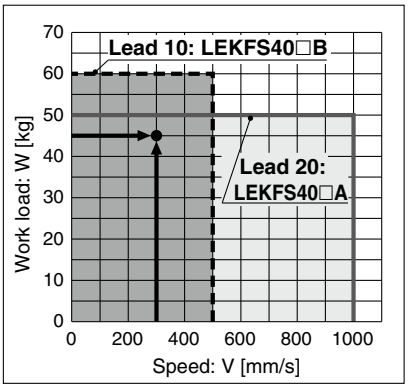

<Speed–Work load graph> (LEKFS40)

Step 1 **Check the work load–speed. <Speed–Work load graph>** (page 28)

Select a model based on the workpiece mass and speed while referencing the speed–work load graph.

Selection example) The **LEKFS40S4B-200** can be temporarily selected as a possible candidate based on the graph shown on the right side.

Step 2 **Check the cycle time.**

Calculate **the cycle time** using the following calculation method.

Cycle time:

T can be found from the following equation.

$$T = T1 + T2 + T3 + T4 \text{ [s]}$$

- T1: Acceleration time and T3: Deceleration time can be found by the following equation.

$$T1 = V/a1 \text{ [s]} \qquad T3 = V/a2 \text{ [s]}$$

- T2: Constant speed time can be found from the following equation.

$$T2 = \frac{L - 0.5 \cdot V \cdot (T1 + T3)}{V} \text{ [s]}$$

- T4: Settling time varies depending on the motor type and load. The value below is recommended.

$$T4 = 0.05 \text{ [s]}$$

Calculation example)
T1 to T4 can be calculated as follows.

$T1 = V/a1 = 300/3000 = 0.1$ [s],

$T3 = V/a2 = 300/3000 = 0.1$ [s]

$$T2 = \frac{L - 0.5 \cdot V \cdot (T1 + T3)}{V} = \frac{200 - 0.5 \cdot 300 \cdot (0.1 + 0.1)}{300} = 0.57 \text{ [s]}$$

$T4 = 0.05$ [s]

The cycle time can be found as follows.

$T = T1 + T2 + T3 + T4$

$= 0.1 + 0.57 + 0.1 + 0.05$

$=$ **0.82 [s]**

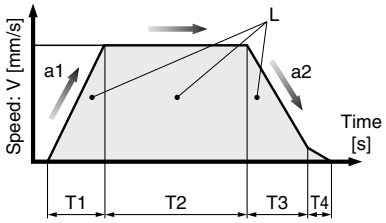

L : Stroke [mm] ··· (Operating condition)
V : Speed [mm/s] ··· (Operating condition)
a1: Acceleration [mm/s²] ··· (Operating condition)
a2: Deceleration [mm/s²] ··· (Operating condition)

T1: Acceleration time [s]
Time until reaching the set speed
T2: Constant speed time [s]
Time while the actuator is operating at a constant speed
T3: Deceleration time [s]
Time from the beginning of the constant speed operation to stop
T4: Settling time [s]
Time until positioning is completed

Step 3 **Check the allowable moment. <Static allowable moment>** (page 34)
<Dynamic allowable moment> (pages 32, 33)

Confirm the moment that applies to the actuator is within the allowable range for both static and dynamic conditions.

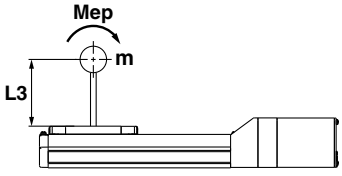

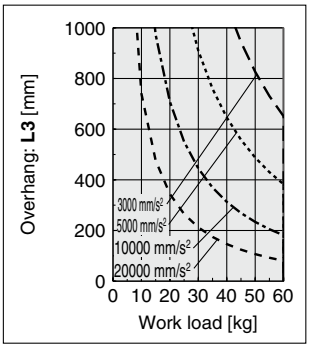

Based on the above calculation result, the LEKFS40S4B-200 should be selected.

Speed–Work Load Graph/Required Conditions for the Regeneration Option (Guide)

∗ The allowable speed is restricted depending on the stroke. Select it by referring to the "Allowable Stroke Speed" below.

LEKFS25/Ball Screw Drive

Horizontal

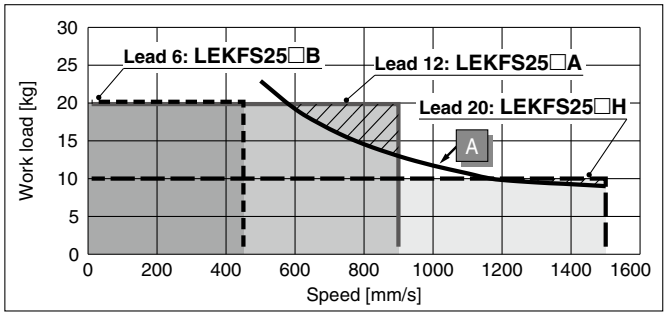

Vertical

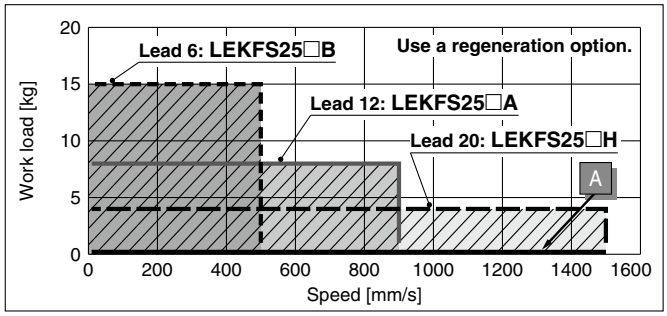

LEKFS32/Ball Screw Drive

Horizontal

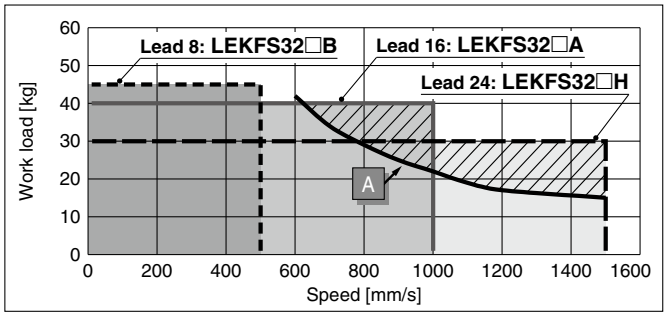

Vertical

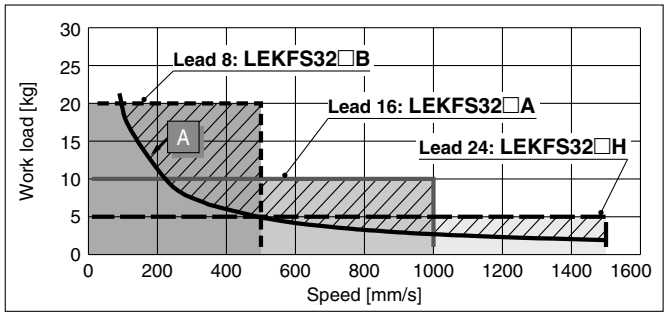

LEKFS40/Ball Screw Drive

Horizontal

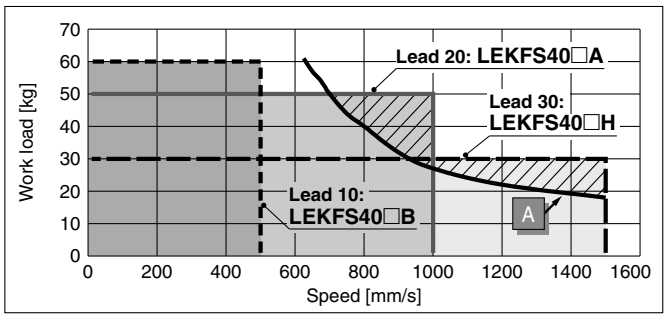

Vertical

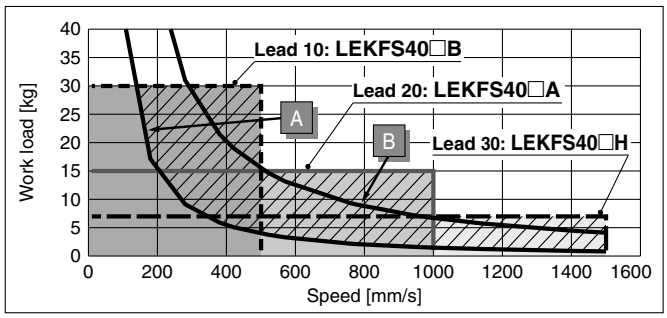

Required conditions for the regeneration option

∗ The regeneration option is required when using the product above the regeneration line in the graph. (It must be ordered separately.)

Regeneration Option Models

Operating condition	Model
A	LEC-MR-RB-032
B	LEC-MR-RB-12

Allowable Stroke Speed

[mm/s]

Model	AC servo motor	Lead		Stroke [mm]											
		Symbol	[mm]	Up to 100	Up to 200	Up to 300	Up to 400	Up to 500	Up to 600	Up to 700	Up to 800	Up to 900	Up to 1000	Up to 1100	Up to 1200
LEKFS25	100 W/□40	H	20	1500				1200	900	700	550	—	—	—	—
		A	12	900				720	540	420	330	—	—	—	—
		B	6	450				360	270	210	160	—	—	—	—
		(Motor rotation speed)		(4500 rpm)				(3650 rpm)	(2700 rpm)	(2100 rpm)	(1650 rpm)	—	—	—	—
LEKFS32	200 W/□60	H	24	1500					1200	930	750	610	510	—	—
		A	16	1000					800	620	500	410	340	—	—
		B	8	500					400	310	250	200	170	—	—
		(Motor rotation speed)		(3750 rpm)					(3000 rpm)	(2325 rpm)	(1875 rpm)	(1537 rpm)	(1275 rpm)	—	—
LEKFS40	400 W/□60	H	30	—	1500					1410	1140	930	780	500	
		A	20	—	1000					940	760	620	520	440	380
		B	10	—	500					470	380	310	260	220	190
		(Motor rotation speed)		—	(3000 rpm)					(2820 rpm)	(2280 rpm)	(1860 rpm)	(1560 rpm)	(1320 rpm)	(1140 rpm)

Work Load–Acceleration/Deceleration Graph (Guide)

LEKFS25□□H/Ball Screw Drive

Horizontal

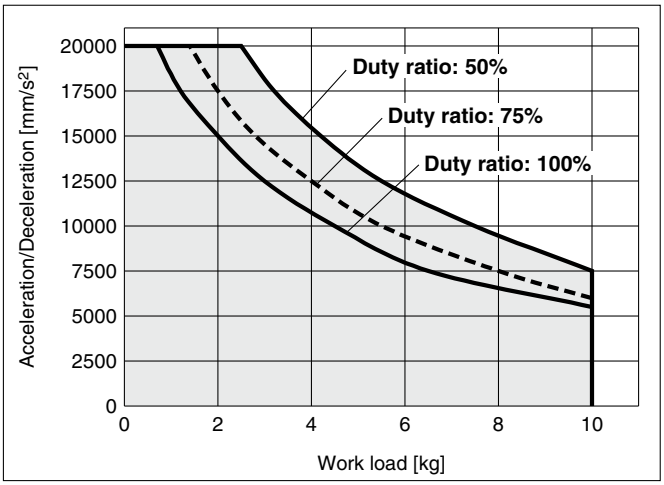

LEKFS25□□H/Ball Screw Drive

Vertical

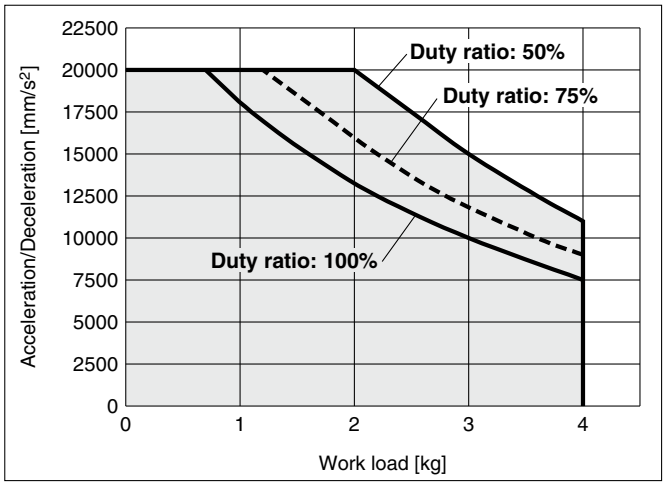

LEKFS25□□A/Ball Screw Drive

Horizontal

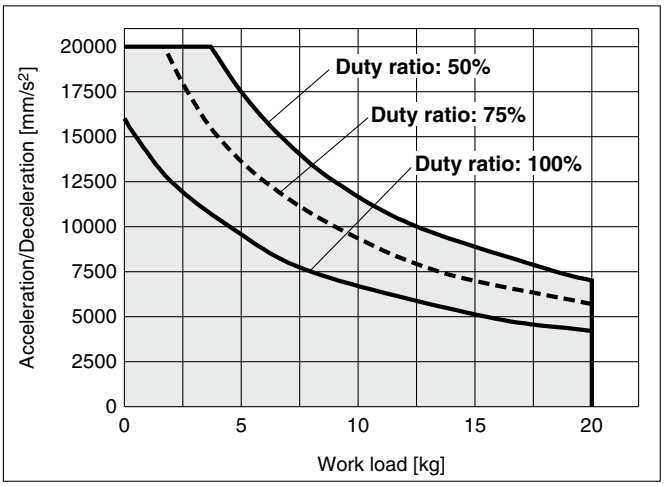

LEKFS25□□A/Ball Screw Drive

Vertical

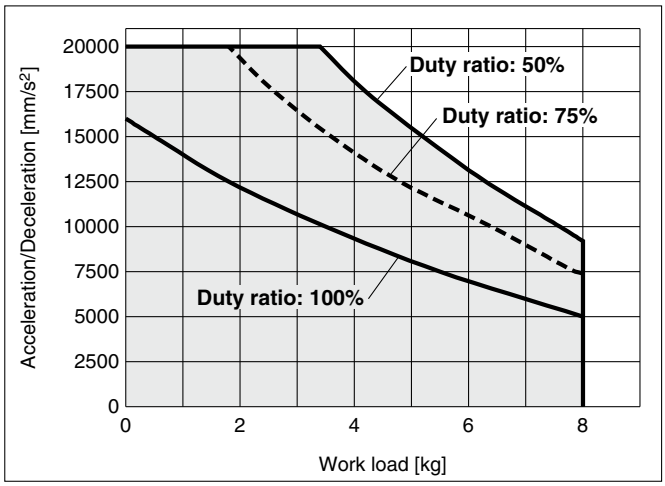

LEKFS25□□B/Ball Screw Drive

Horizontal

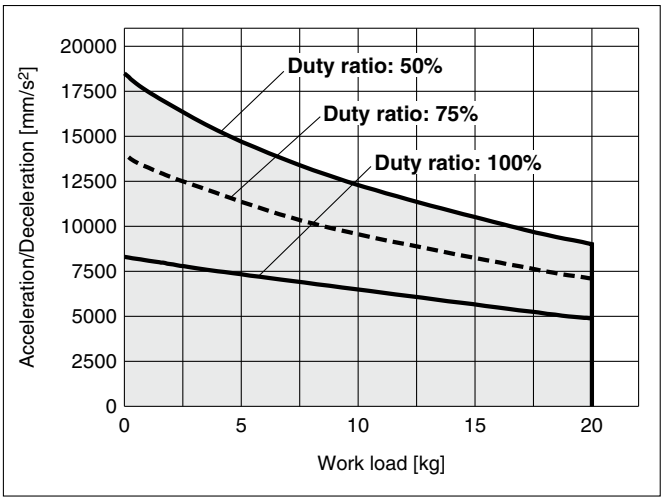

LEKFS25□□B/Ball Screw Drive

Vertical

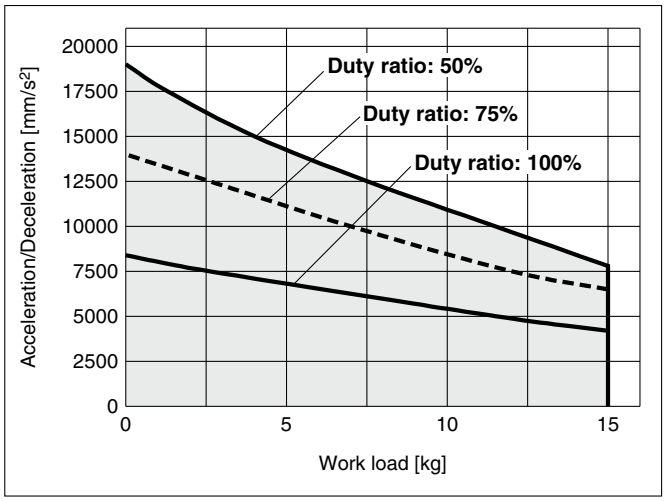

Work Load–Acceleration/Deceleration Graph (Guide)

LEKFS32□□H/Ball Screw Drive

Horizontal

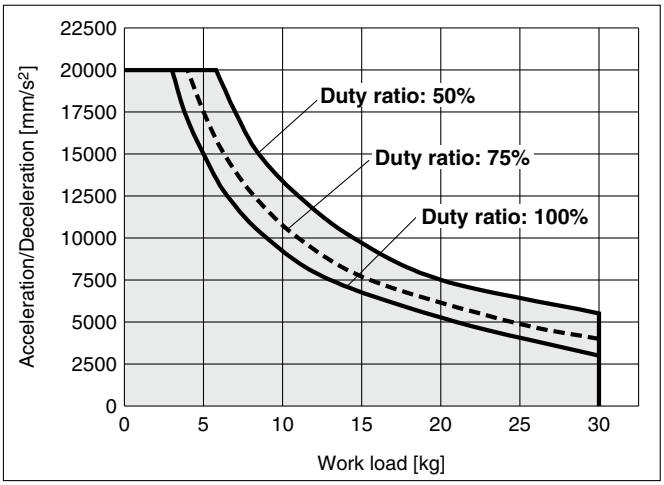

LEKFS32□□H/Ball Screw Drive

Vertical

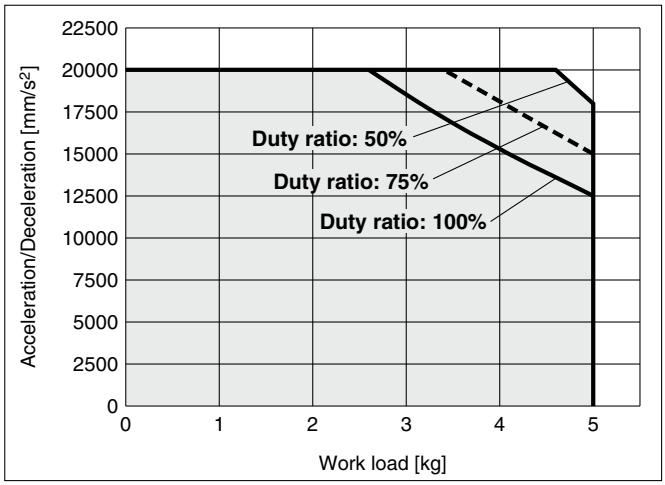

LEKFS32□□A/Ball Screw Drive

Horizontal

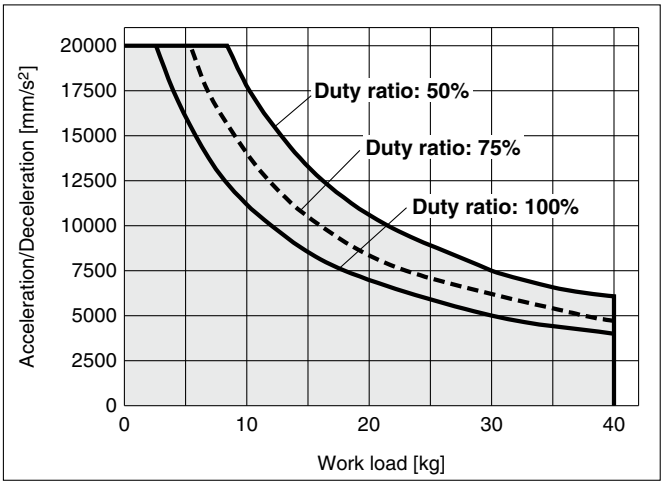

LEKFS32□□A/Ball Screw Drive

Vertical

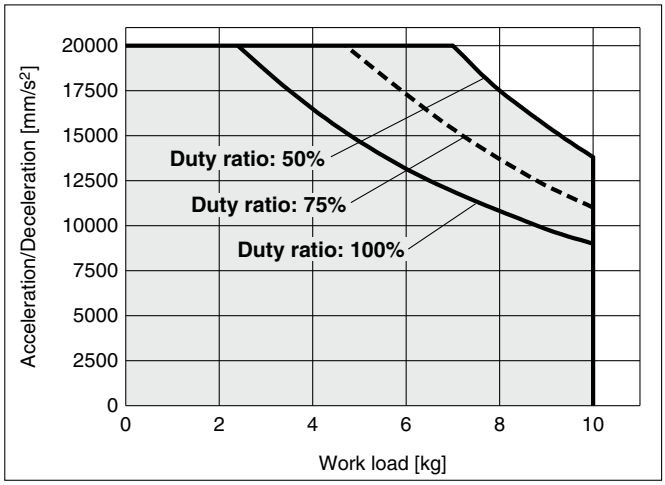

LEKFS32□□B/Ball Screw Drive

Horizontal

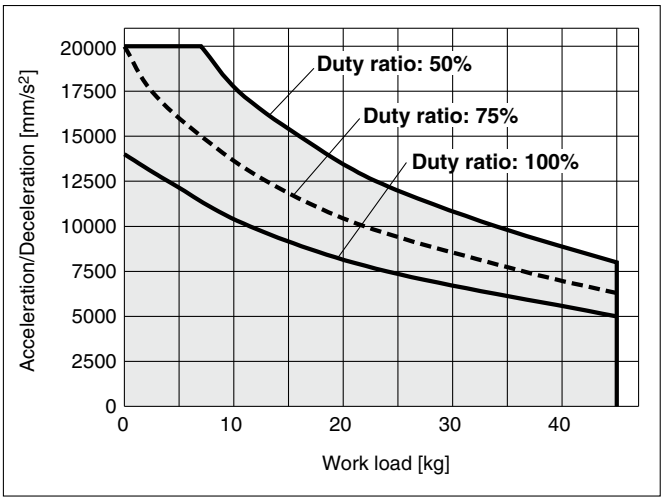

LEKFS32□□B/Ball Screw Drive

Vertical

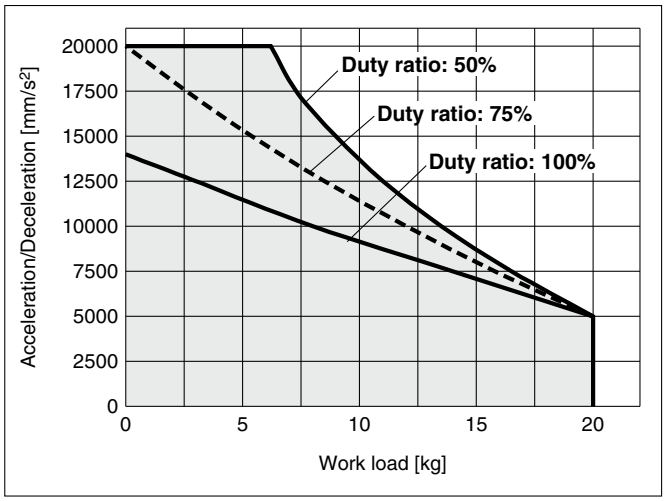

Work Load–Acceleration/Deceleration Graph (Guide)

LEKFS40□□H/Ball Screw Drive

Horizontal

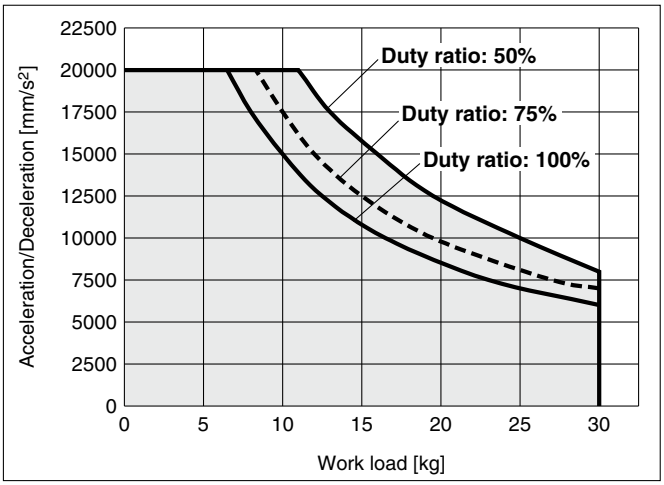

LEKFS40□□H/Ball Screw Drive

Vertical

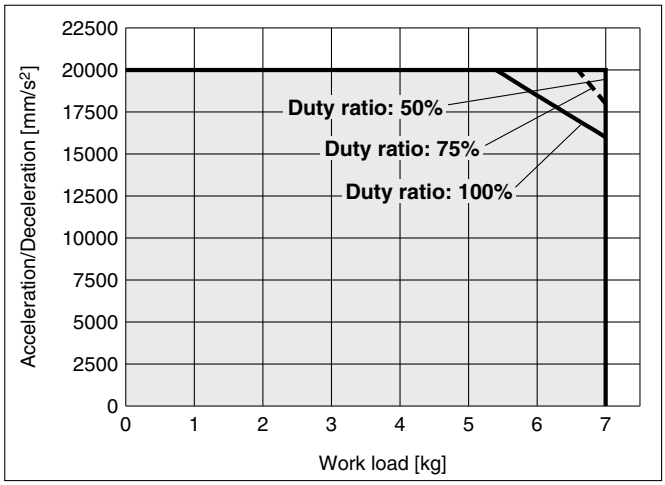

LEKFS40□□A/Ball Screw Drive

Horizontal

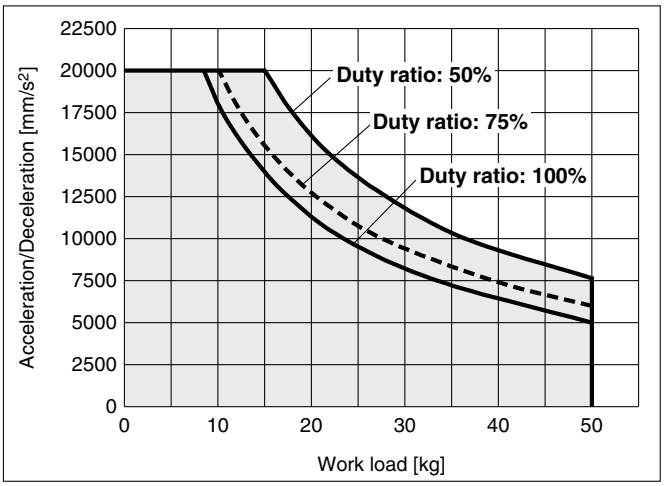

LEKFS40□□A/Ball Screw Drive

Vertical

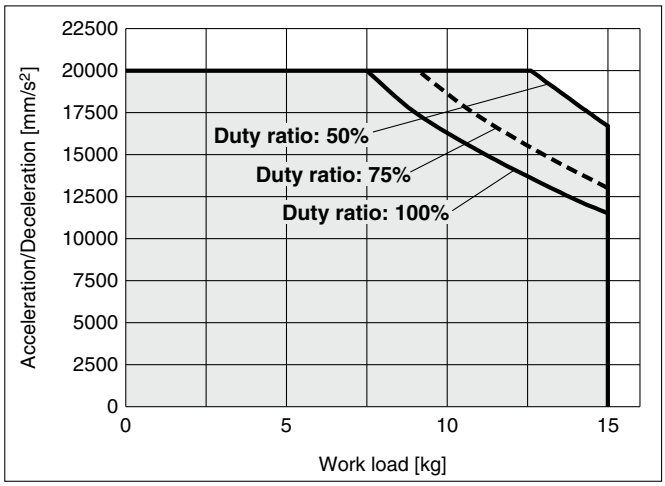

LEKFS40□□B/Ball Screw Drive

Horizontal

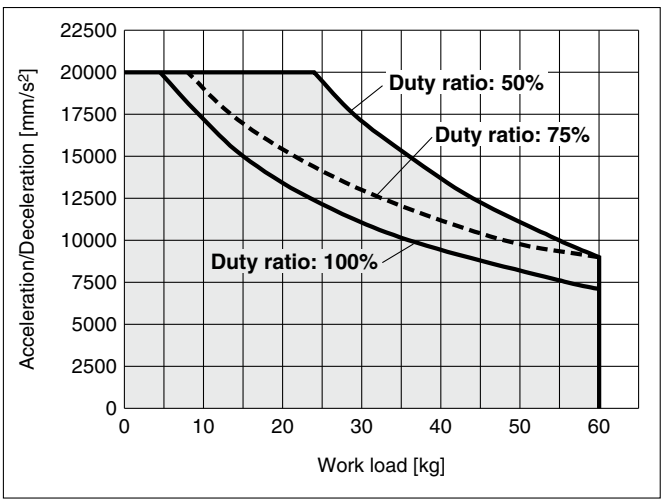

LEKFS40□□B/Ball Screw Drive

Vertical

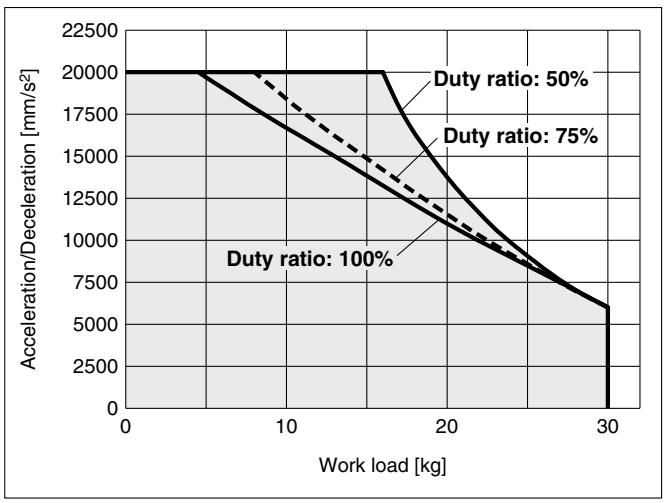

Dynamic Allowable Moment

* These graphs show the amount of allowable overhang (guide unit) when the center of gravity of the workpiece overhangs in one direction. When selecting the overhang, refer to the "Calculation of Guide Load Factor" or the Electric Actuator Model Selection Software for confirmation: https://www.smcworld.com

Acceleration/Deceleration ——1000 mm/s² — — —3000 mm/s² ·····5000 mm/s² —·—·—10000 mm/s² - - - -20000 mm/s²

Orientation	Load overhanging direction **m** : Work load [kg] **Me**: Allowable moment [N·m] **L** : Overhang to the work load center of gravity [mm]		Model LEKFS25	Model LEKFS32	Model LEKFS40
Horizontal/Bottom	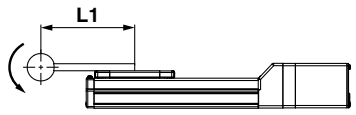	X	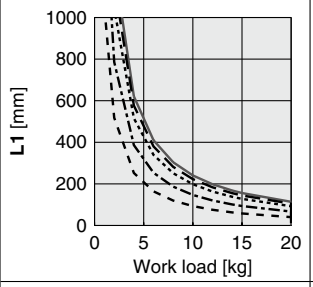	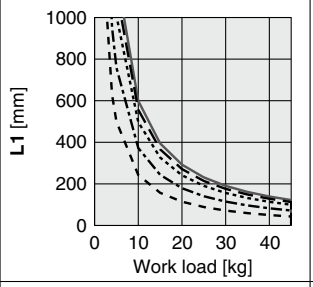	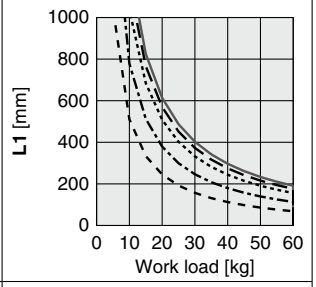
	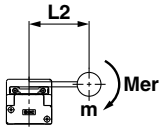	Y	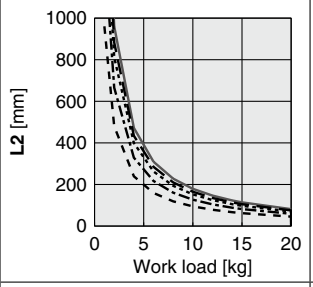	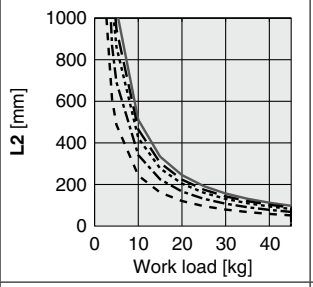	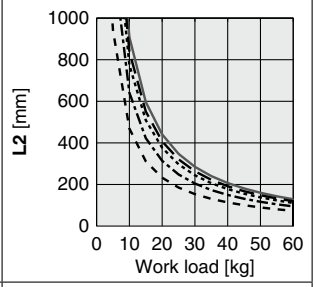
	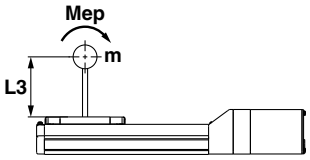 * Acceleration/deceleration of LEKFS25, LEKFS32, and LEKFS40: Calculate the overhang for the work load at 1000 mm/s² based on the model selection software.	Z	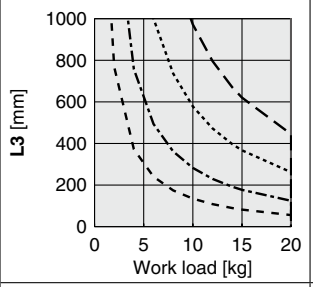	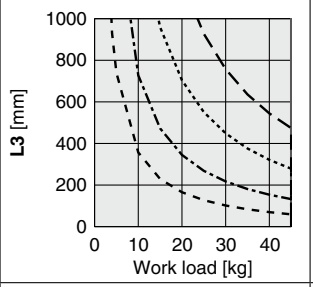	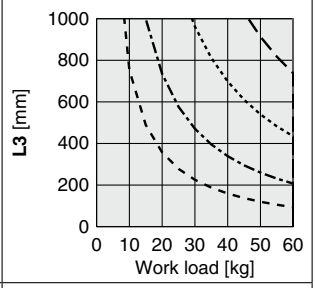
Wall	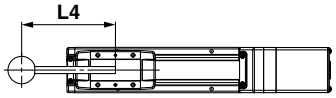 * Acceleration/deceleration of LEKFS25, LEKFS32, and LEKFS40: Calculate the overhang for the work load at 1000 mm/s² based on the model selection software.	X	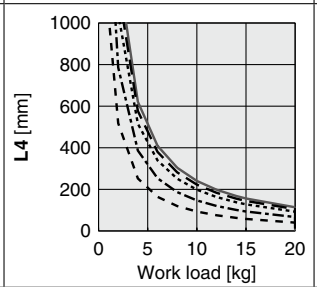	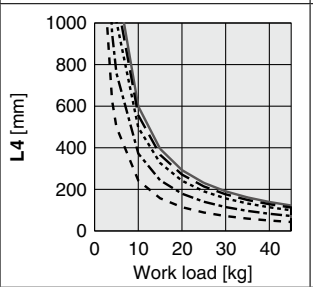	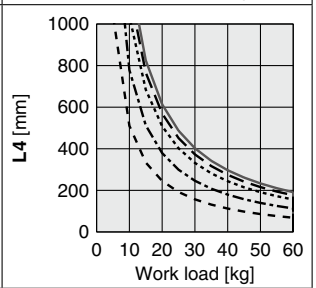
	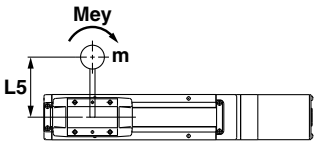	Y	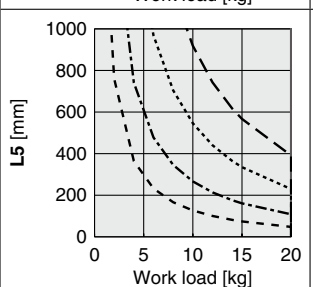	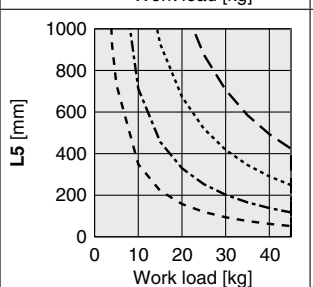	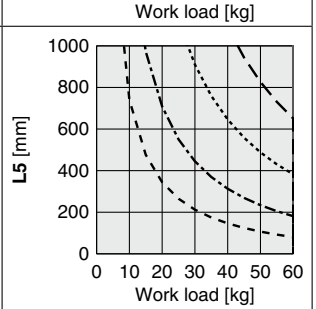
	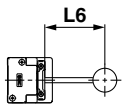	Z	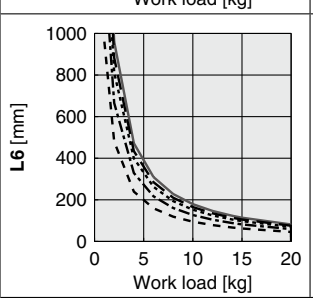	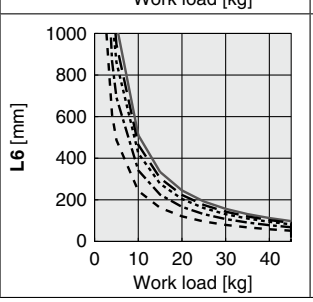	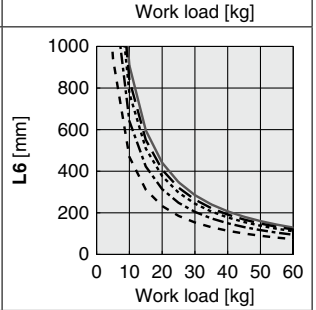

Dynamic Allowable Moment

* These graphs show the amount of allowable overhang (guide unit) when the center of gravity of the workpiece overhangs in one direction. When selecting the overhang, refer to the "Calculation of Guide Load Factor" or the Electric Actuator Model Selection Software for confirmation: https://www.smcworld.com

Acceleration/Deceleration ——1000 mm/s² — — —3000 mm/s² ·····5000 mm/s² –·–·–10000 mm/s² - - - - 20000 mm/s²

Orientation	Load overhanging direction **m** : Work load [kg] **Me**: Allowable moment [N·m] **L** : Overhang to the work load center of gravity [mm]		Model		
			LEKFS25	**LEKFS32**	**LEKFS40**
Vertical	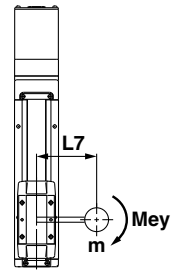	Y	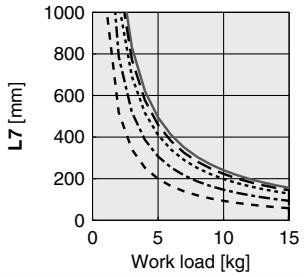	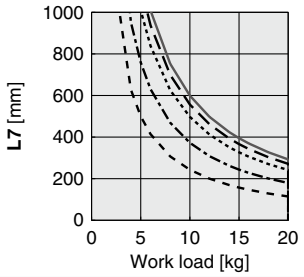	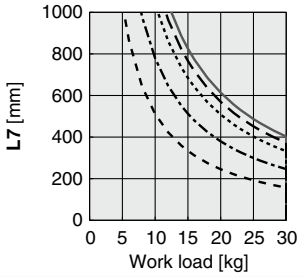
	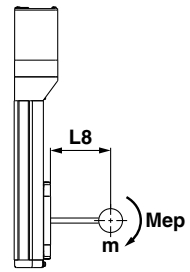	Z	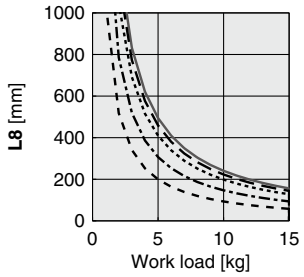	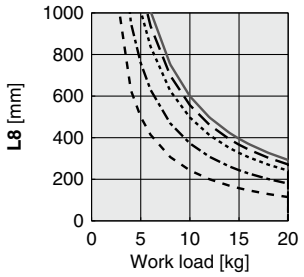	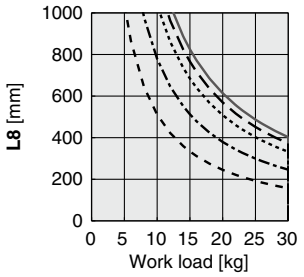

Calculation of Guide Load Factor

1. Decide operating conditions.
   Model: LEKFS
   Size: 25/32/40
   Mounting orientation: Horizontal/Bottom/Wall/Vertical
   Acceleration [mm/s²]: **a**
   Work load [kg]: **m**
   Work load center position [mm]: **Xc/Yc/Zc**
2. Select the target graph while referencing the model, size, and mounting orientation.
3. Based on the acceleration and work load, find the overhang [mm]: **Lx/Ly/Lz** from the graph.
4. Calculate the load factor for each direction.
   α**x = Xc/Lx**, α**y = Yc/Ly**, α**z = Zc/Lz**
5. Confirm the total of α**x**, α**y**, and α**z** is 1 or less.
   α**x + αy + αz ≤ 1**
   When 1 is exceeded, please consider a reduction of acceleration and work load, or a change of the work load center position and series.

Mounting orientation

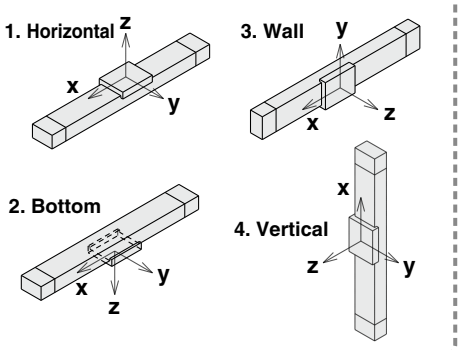

Example

1. Operating conditions
   Model: LEKFS40
   Size: 40
   Mounting orientation: Horizontal
   Acceleration [mm/s²]: 3000
   Work load [kg]: 20
   Work load center position [mm]: **Xc = 0**, **Yc = 50**, **Zc = 200**
2. Select the graphs for horizontal of the LEKFS40 on page 32.
3. **Lx = 560 mm**, **Ly = 400 mm**, **Lz = 1000 mm**
4. The load factor for each direction can be found as follows.
   α**x = 0/560 = 0**
   α**y = 50/400 = 0.13**
   α**z = 200/1000 = 0.2**
5. α**x + αy + αz = 0.33 ≤ 1**

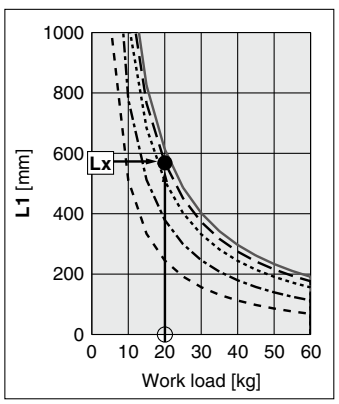

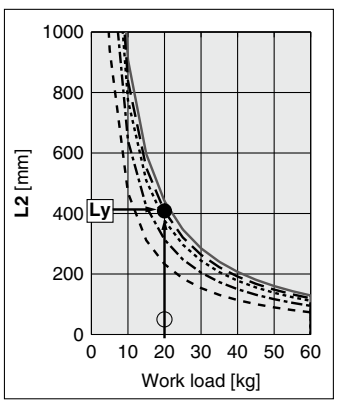

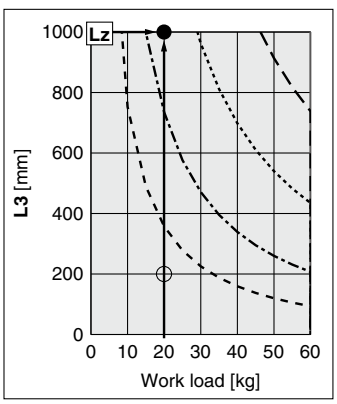

Table Accuracy (Reference Value)

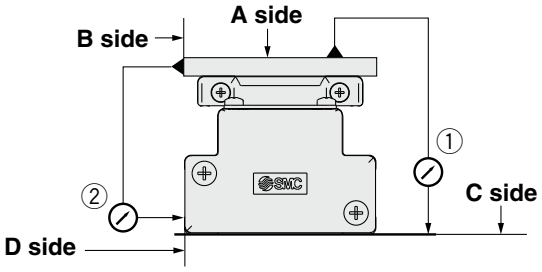

Model	Traveling parallelism [mm] (Every 300 mm)	
	① C side traveling parallelism to A side	② D side traveling parallelism to B side
LEKFS25	0.04	0.02
LEKFS32	0.04	0.02
LEKFS40	0.04	0.02

∗ Traveling parallelism does not include the mounting surface accuracy.

Table Displacement (Reference Value)

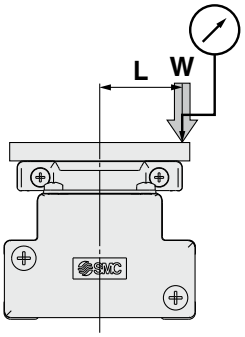

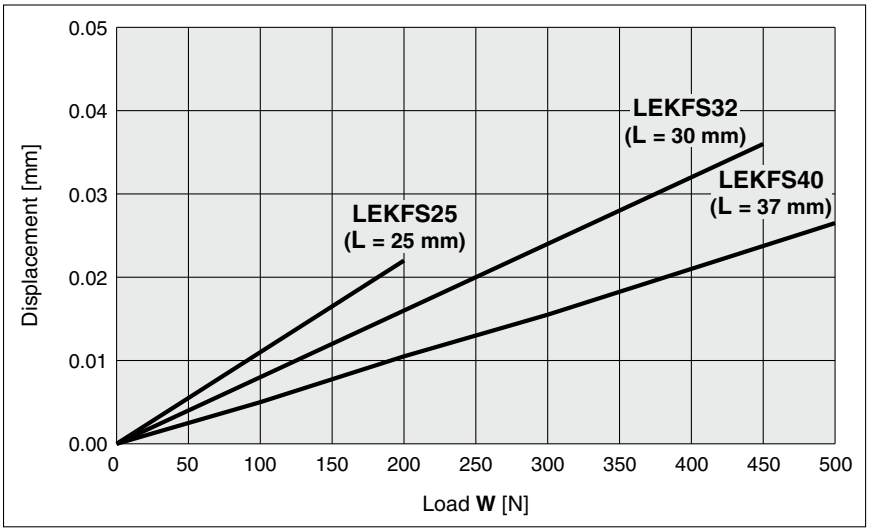

∗ This displacement is measured when a 15 mm aluminum plate is mounted and fixed on the table.

Static Allowable Moment∗1

Model	LEKFS25	LEKFS32	LEKFS40
Pitching [N·m]	61	141	264
Yawing [N·m]	70	141	264
Rolling [N·m]	115	290	473

∗1 The static allowable moment is the amount of static moment which can be applied to the actuator when it is stopped.
If the product is exposed to impact or repeated load, be sure to take adequate safety measures when using the product.

Ball Screw Drive/*LEKFS Series*

Model Selection

LECS□ Series ▶p. 50 LEKFS Series ▶p. 60

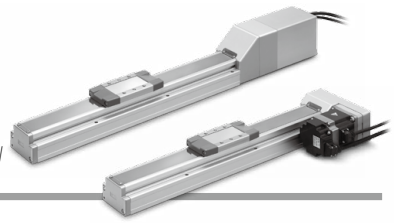

Selection Procedure

* The Work Load-Acceleration/Deceleration Graph, Dynamic Allowable Moment, Calculation of Guide Load Factor, Table Accuracy/Displacement, and Static Allowable Moment are the same as those of the LECS□ AC servo motor. For details, refer to page 29 and onward.

Step 1 Check the work load–speed. → **Step 2** Check the cycle time. → **Step 3** Check the allowable moment.

Selection Example

Operating conditions

- Workpiece mass: 45 [kg]
- Speed: 300 [mm/s]
- Acceleration/Deceleration: 3000 [mm/s²]
- Stroke: 200 [mm]
- Mounting position: Horizontal upward
- Workpiece mounting condition:

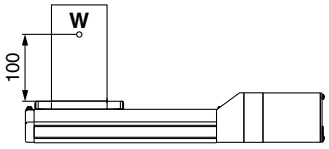

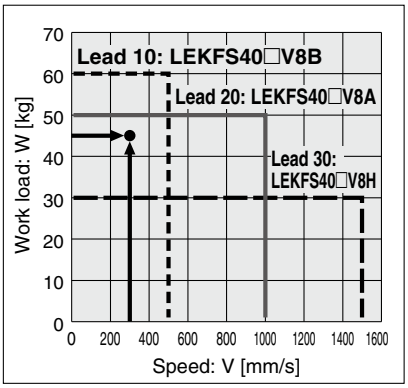

<Speed–Work load graph> (LEKFS40)

Step 1 **Check the work load–speed. <Speed–Work load graph>** (page 36)

Select a model based on the workpiece mass and speed while referencing the speed–work load graph.

Selection example) The **LEKFS40V8B-200** can be temporarily selected as a possible candidate based on the graph shown on the right side.

Step 2 **Check the cycle time.**

Calculate **the cycle time** using the following calculation method.

Cycle time:

T can be found from the following equation.

$$T = T1 + T2 + T3 + T4 \text{ [s]}$$

- T1: Acceleration time and T3: Deceleration time can be found by the following equation.

$$T1 = V/a1 \text{ [s]} \qquad T3 = V/a2 \text{ [s]}$$

- T2: Constant speed time can be found from the following equation.

$$T2 = \frac{L - 0.5 \cdot V \cdot (T1 + T3)}{V} \text{ [s]}$$

- T4: Settling time varies depending on the motor type and load. The value below is recommended.

$$T4 = 0.05 \text{ [s]}$$

Calculation example)
T1 to T4 can be calculated as follows.

$T1 = V/a1 = 300/3000 = 0.1$ [s],

$T3 = V/a2 = 300/3000 = 0.1$ [s]

$$T2 = \frac{L - 0.5 \cdot V \cdot (T1 + T3)}{V} = \frac{200 - 0.5 \cdot 300 \cdot (0.1 + 0.1)}{300} = 0.57 \text{ [s]}$$

$T4 = 0.05$ [s]

The cycle time can be found as follows.

$T = T1 + T2 + T3 + T4$

$= 0.1 + 0.57 + 0.1 + 0.05$

$=$ **0.82 [s]**

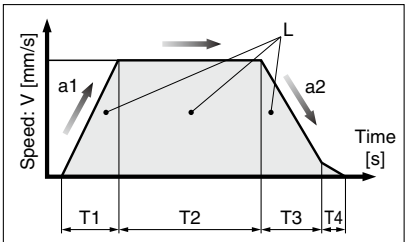

L : Stroke [mm] ··· (Operating condition)
V : Speed [mm/s] ··· (Operating condition)
a1: Acceleration [mm/s²] ··· (Operating condition)
a2: Deceleration [mm/s²] ··· (Operating condition)

T1: Acceleration time [s]
Time until reaching the set speed
T2: Constant speed time [s]
Time while the actuator is operating at a constant speed
T3: Deceleration time [s]
Time from the beginning of the constant speed operation to stop
T4: Settling time [s]
Time until positioning is completed

Step 3 **Check the allowable moment. <Static allowable moment>** (page 34) **<Dynamic allowable moment>** (pages 32, 33)

Confirm the moment that applies to the actuator is within the allowable range for both static and dynamic conditions.

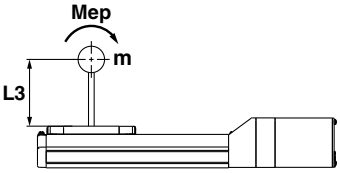

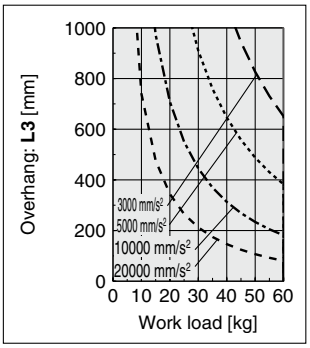

Based on the above calculation result, the LEKFS40V8B-200 should be selected.

Speed–Work Load Graph/Required Conditions for the Regenerative Resistor (Guide)

∗ The allowable speed is restricted depending on the stroke. Select it by referring to the "Allowable Stroke Speed" below.

LEKFS25/Ball Screw Drive

Horizontal

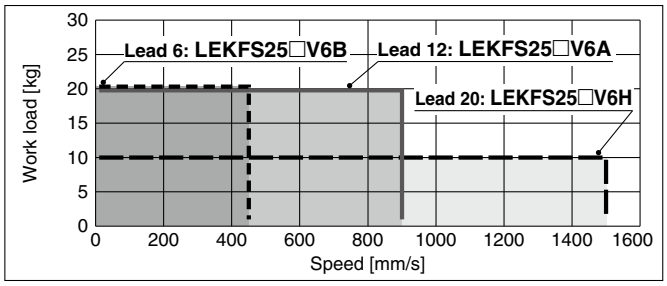

Vertical

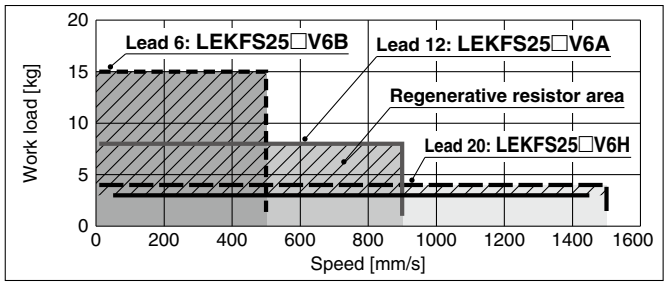

LEKFS32/Ball Screw Drive

Horizontal

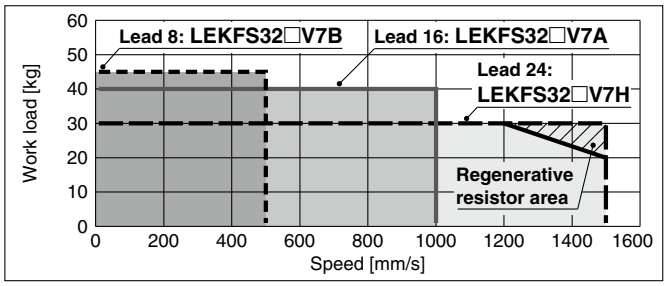

Vertical

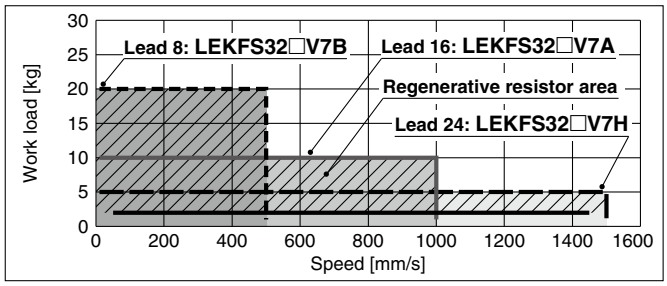

LEKFS40/Ball Screw Drive

Horizontal

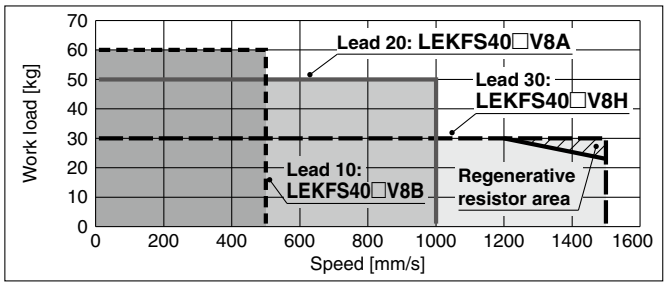

Vertical

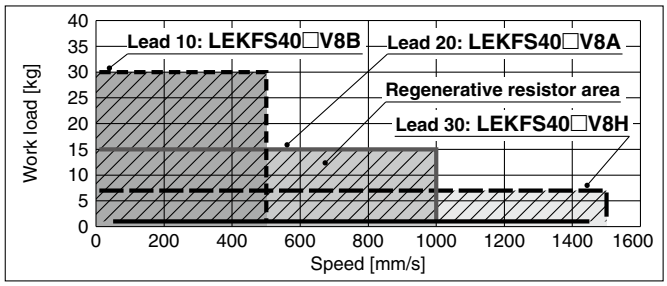

Regenerative resistor area

∗ When using the actuator in the regenerative resistor area, download the "AC servo drive capacity selection program/SigmaJunmaSize+" from the SMC website. Then, calculate the necessary regenerative resistor capacity to prepare an appropriate external regenerative resistor.
∗ The regenerative resistor should be provided by the customer.

Applicable Motors/Drivers

Model	Applicable model	
	Motor	Servopack (SMC driver)
LEKFS25□	SGMJV-01A3A	SGDV-R90A11□(LECYM2-V5) SGDV-R90A21□(LECYU2-V5)
LEKFS32□	SGMJV-02A3A	SGDV-1R6A11□(LECYM2-V7) SGDV-1R6A21□(LECYU2-V7)
LEKFS40□	SGMJV-04A3A	SGDV-2R8A11□(LECYM2-V8) SGDV-2R8A21□(LECYU2-V8)

Allowable Stroke Speed

[mm/s]

Model	AC servo motor	Lead		Stroke [mm]											
		Symbol	[mm]	Up to 100	Up to 200	Up to 300	Up to 400	Up to 500	Up to 600	Up to 700	Up to 800	Up to 900	Up to 1000	Up to 1100	Up to 1200
LEKFS25	100 W/□40	H	20	1500				1200	900	700	550	—	—	—	—
		A	12	900				720	540	420	330	—	—	—	—
		B	6	450				360	270	210	160	—	—	—	—
		(Motor rotation speed)		(4500 rpm)				(3650 rpm)	(2700 rpm)	(2100 rpm)	(1650 rpm)	—	—	—	—
LEKFS32	200 W/□60	H	24	1500					1200	930	750	610	510	—	—
		A	16	1000					800	620	500	410	340	—	—
		B	8	500					400	310	250	200	170	—	—
		(Motor rotation speed)		(3750 rpm)					(3000 rpm)	(2325 rpm)	(1875 rpm)	(1537 rpm)	(1275 rpm)	—	—
LEKFS40	400 W/□60	H	30	—	1500					1410	1140	930	780	500	
		A	20	—	1000					940	760	620	520	440	380
		B	10	—	500					470	380	310	260	220	190
		(Motor rotation speed)		—	(3000 rpm)					(2820 rpm)	(2280 rpm)	(1860 rpm)	(1560 rpm)	(1320 rpm)	(1140 rpm)

Battery-less Absolute (Step Motor 24 VDC)

High Rigidity and High Precision Slider Type

LEKFS Series LEKFS16, 25, 32, 40

For details, refer to page 128.

How to Order

LEKFS 32 ❶ E ❸ A ❹ – 300 ❺ ❻ ❼ – R1 ❽ CD17T ❾

❶ Size

16
25
32
40

❷ Motor mounting position

Nil	In-line
R	Right side parallel
L	Left side parallel

❸ Motor type

E	Battery-less absolute (Step motor 24 VDC)

❹ Lead [mm]

Symbol	LEKFS16	LEKFS25	LEKFS32	LEKFS40
H	—	20	24	30
A	10	12	16	20
B	5	6	8	10

❺ Stroke*1

Size	Stroke																
	50	100	150	200	250	300	350	400	450	500	600	700	800	900	1000	1100	1200
16	●	●	●	●	●	●	●	●	●	●	—	—	—	—	—	—	—
25	●	●	●	●	●	●	●	●	●	●	●	●	●	—	—	—	—
32	●	●	●	●	●	●	●	●	●	●	●	●	●	●	●	—	—
40	—	—	●	●	●	●	●	●	●	●	●	●	●	●	●	●	●

❻ Motor option

Nil	Without option
B	With lock

❼ Grease application (Seal band part)

Nil	With
N	Without (Roller specification)

❽ Actuator cable type/length

Robotic cable [m]

Nil	None	R8	8*2
R1	1.5	RA	10*2
R3	3	RB	15*2
R5	5	RC	20*2

Refer to pages 71 to 73 for auto switches (to be ordered separately) and page 70 for auto switch mounting.

⑨ Controller

Nil	Without controller
C□1□□	With controller

C D 1 7 T

Interface (Communication protocol/Input/Output)

Symbol	Type	Number of axes, Special specification: Standard	Number of axes, Special specification: With STO sub-function
5	Parallel input (NPN)	●	
6	Parallel input (PNP)	●	
E	EtherCAT	●	●
9	EtherNet/IP™	●	●
P	PROFINET	●	●
D	DeviceNet®	●	
L	IO-Link	●	●
M	CC-Link	●	

Mounting

7	Screw mounting
8∗3	DIN rail

Number of axes, Special specification

Symbol	Number of axes	Specification
1	Single axis	Standard
F	Single axis	With STO sub-function

Communication plug connector, I/O cable∗4

Symbol	Type	Applicable interface
Nil	Without accessory	—
S	Straight type communication plug connector	DeviceNet® CC-Link Ver. 1.10
T	T-branch type communication plug connector	
1	I/O cable (1.5 m)	Parallel input (NPN) Parallel input (PNP)
3	I/O cable (3 m)	
5	I/O cable (5 m)	

∗1 Please contact SMC for non-standard strokes as they are produced as special orders.
∗2 Produced upon receipt of order
∗3 The DIN rail is not included. It must be ordered separately.
∗4 Select "Nil" for anything other than DeviceNet®, CC-Link, or parallel input.
Select "Nil," "S," or "T" for DeviceNet® or CC-Link.
Select "Nil," "1," "3," or "5" for parallel input.

⚠Caution

[CE/UKCA-compliant products]
EMC compliance was tested by combining the electric actuator LEKFS series and the controller JXC series.
The EMC depends on the configuration of the customer's control panel and the relationship with other electrical equipment and wiring. Therefore, compliance with the EMC directive cannot be certified for SMC components incorporated into the customer's equipment under actual operating conditions. As a result, it is necessary for the customer to verify compliance with the EMC directive for the machinery and equipment as a whole.

[Precautions relating to differences in controller versions]
When the JXC series is to be used in combination with the battery-less absolute encoder, use a controller that is version V3.4 or S3.4 or higher. For details, refer to page 94.

[UL-certified products]
The JXC series controllers used in combination with electric actuators are UL certified.

The actuator and controller are sold as a package.

Confirm that the combination of the controller and actuator is correct.

<Check the following before use.>
① Check the actuator label for the model number.
This number should match that of the controller.
② Parallel input (NPN or PNP)

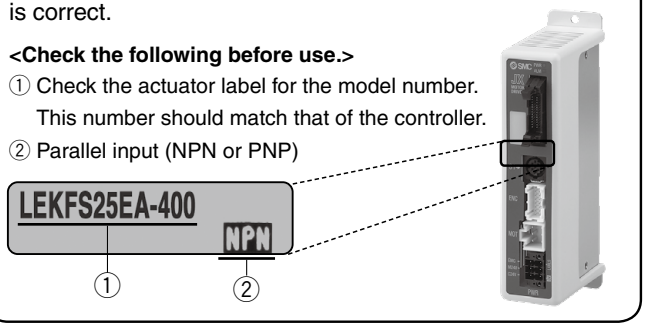

∗ Refer to the Operation Manual for using the products.
Please download it via our website: https://www.smcworld.com

■Trademark

EtherNet/IP® is a registered trademark of ODVA, Inc.
DeviceNet® is a registered trademark of ODVA, Inc.
EtherCAT® is registered trademark and patented technology, licensed by Beckhoff Automation GmbH, Germany.

Type	Step data input type	EtherCAT direct input type	EtherCAT direct input type with STO sub-function	EtherNet/IP™ direct input type	EtherNet/IP™ direct input type with STO sub-function	PROFINET direct input type	PROFINET direct input type with STO sub-function	DeviceNet® direct input type	IO-Link direct input type	IO-Link direct input type with STO sub-function	CC-Link direct input type
Series	**JXC51 JXC61**	**JXCE1**	**JXCEF**	**JXC91**	**JXC9F**	**JXCP1**	**JXCPF**	**JXCD1**	**JXCL1**	**JXCLF**	**JXCM1**
Features	Parallel I/O	EtherCAT direct input	EtherCAT direct input with STO sub-function	EtherNet/IP™ direct input	EtherNet/IP™ direct input with STO sub-function	PROFINET direct input	PROFINET direct input with STO sub-function	DeviceNet® direct input	IO-Link direct input	IO-Link direct input with STO sub-function	CC-Link direct input
Compatible motor	Battery-less absolute (Step motor 24 VDC)										
Max. number of step data	64 points										
Power supply voltage	24 VDC										
Reference page	79	86									

Specifications

Battery-less Absolute (Step Motor 24 VDC)

Model				LEKFS16		LEKFS25			LEKFS32			LEKFS40		
Actuator specifications	Stroke [mm]			50 to 500		50 to 800			50 to 1000			150 to 1200		
	Work load [kg]*1		Horizontal	14	15	12	25	30	20	45	50	25	55	65
			Vertical	2	4	0.5	7.5	15	4	10	20	2	2	23
	Speed*1 [mm/s]	In-line	Up to 400	10 to 700	5 to 360	20 to 1100	12 to 750	6 to 400	24 to 1200	16 to 800	8 to 400	30 to 1200	20 to 850	10 to 300
			401 to 500	10 to 600	5 to 300	20 to 1100	12 to 750	6 to 400	24 to 1200	16 to 800	8 to 400	30 to 1200	20 to 850	10 to 300
			501 to 600	—	—	20 to 900	12 to 540	6 to 270	24 to 1200	16 to 800	8 to 400	30 to 1200	20 to 850	10 to 300
			601 to 700	—	—	20 to 630	12 to 420	6 to 230	24 to 930	16 to 620	8 to 310	30 to 1200	20 to 850	10 to 300
			701 to 800	—	—	20 to 550	12 to 330	6 to 180	24 to 750	16 to 500	8 to 250	30 to 1140	20 to 760	10 to 300
			801 to 900	—	—	—	—	—	24 to 610	16 to 410	8 to 200	30 to 930	20 to 620	10 to 300
			901 to 1000	—	—	—	—	—	24 to 500	16 to 340	8 to 170	30 to 780	20 to 520	10 to 250
			1001 to 1100	—	—	—	—	—	—	—	—	30 to 660	20 to 440	10 to 220
			1101 to 1200	—	—	—	—	—	—	—	—	30 to 570	20 to 380	10 to 190
		Parallel	Up to 400	10 to 700	5 to 360	20 to 900	12 to 600	6 to 300	24 to 800	16 to 650	8 to 325	30 to 750	20 to 550	10 to 300
			401 to 500	10 to 600	5 to 300	20 to 900	12 to 600	6 to 300	24 to 800	16 to 650	8 to 325	30 to 750	20 to 550	10 to 300
			501 to 600	—	—	20 to 900	12 to 540	6 to 270	24 to 800	16 to 650	8 to 325	30 to 750	20 to 550	10 to 300
			601 to 700	—	—	20 to 630	12 to 420	6 to 230	24 to 800	16 to 620	8 to 310	30 to 750	20 to 550	10 to 300
			701 to 800	—	—	20 to 550	12 to 330	6 to 180	24 to 750	16 to 500	8 to 250	30 to 750	20 to 550	10 to 300
			801 to 900	—	—	—	—	—	24 to 610	16 to 410	8 to 200	30 to 750	20 to 550	10 to 300
			901 to 1000	—	—	—	—	—	24 to 500	16 to 340	8 to 170	30 to 750	20 to 520	10 to 250
			1001 to 1100	—	—	—	—	—	—	—	—	30 to 660	20 to 440	10 to 220
			1101 to 1200	—	—	—	—	—	—	—	—	30 to 570	20 to 380	10 to 190
	Max. acceleration/deceleration [mm/s^2]			3000										
	Positioning repeatability [mm]			±0.01 (Lead H: ±0.02)										
	Lost motion [mm]*2			0.05										
	Lead [mm]			10	5	20	12	6	24	16	8	30	20	10
	Impact/Vibration resistance [m/s^2]*3			50/20										
	Actuation type			Ball screw (LEKFS□), Ball screw + Belt (LEKFS□R/L)										
	Guide type			Linear guide										
	Operating temperature range [°C]			5 to 40										
	Operating humidity range [%RH]			90 or less (No condensation)										
	Enclosure			IP30										
Electric specifications	Motor size			□28		□42			□56.4					
	Motor type			Step motor (Servo 24 VDC)										
	Encoder			Battery-less absolute										
	Power supply voltage [V]			24 VDC ±10%										
	Power [W]*4			Max. power 51		Max. power 57			Max. power 123			Max. power 141		
Lock unit specifications	Type*5			Non-magnetizing lock										
	Holding force [N]			20	39	47	78	157	72	108	216	75	113	225
	Power consumption [W]*6			2.9		5			5			5		
	Power supply voltage [V]			24 VDC ±10%										

*1 Speed changes according to the work load. Check the “Speed–Work Load Graph (Guide)” on pages 22 and 23.
Furthermore, if the cable length exceeds 5 m, then it will decrease by up to 10% for each 5 m.
*2 A reference value for correcting errors in reciprocal operation
*3 Impact resistance: No malfunction occurred when the actuator was tested with a drop tester in both an axial direction and a perpendicular direction to the lead screw. (The test was performed with the actuator in the initial state.)
Vibration resistance: No malfunction occurred in a test ranging between 45 to 2000 Hz. The test was performed in both an axial direction and a perpendicular direction to the lead screw. (The test was performed with the actuator in the initial state.)
*4 Indicates the max. power during operation (including the controller). This value can be used for the selection of the power supply.
*5 With lock only
*6 For an actuator with lock, add the power for the lock.

Weight

Series	LEKFS16									
Stroke [mm]	50	100	150	200	250	300	350	400	450	500
Product weight [kg]	0.9	1.0	1.1	1.2	1.3	1.4	1.5	1.5	1.6	1.7
Additional weight with lock [kg]	0.12									

Series	LEKFS25												
Stroke [mm]	50	100	150	200	250	300	350	400	450	500	600	700	800
Product weight [kg]	1.7	1.8	1.9	2.1	2.3	2.4	2.5	2.6	2.8	2.9	3.2	3.5	3.8
Additional weight with lock [kg]	0.26												

Series	LEKFS32														
Stroke [mm]	50	100	150	200	250	300	350	400	450	500	600	700	800	900	1000
Product weight [kg]	3.2	3.4	3.6	3.8	4.1	4.3	4.5	4.7	4.9	5.1	5.6	6.0	6.4	6.9	7.3
Additional weight with lock [kg]	0.53														

Series	LEKFS40														
Stroke [mm]	150	200	250	300	350	400	450	500	600	700	800	900	1000	1100	1200
Product weight [kg]	5.5	5.8	6.1	6.4	6.7	7.0	7.3	7.6	8.2	8.8	9.4	10.0	10.6	11.2	11.8
Additional weight with lock [kg]	0.53														

Construction: In-line Motor

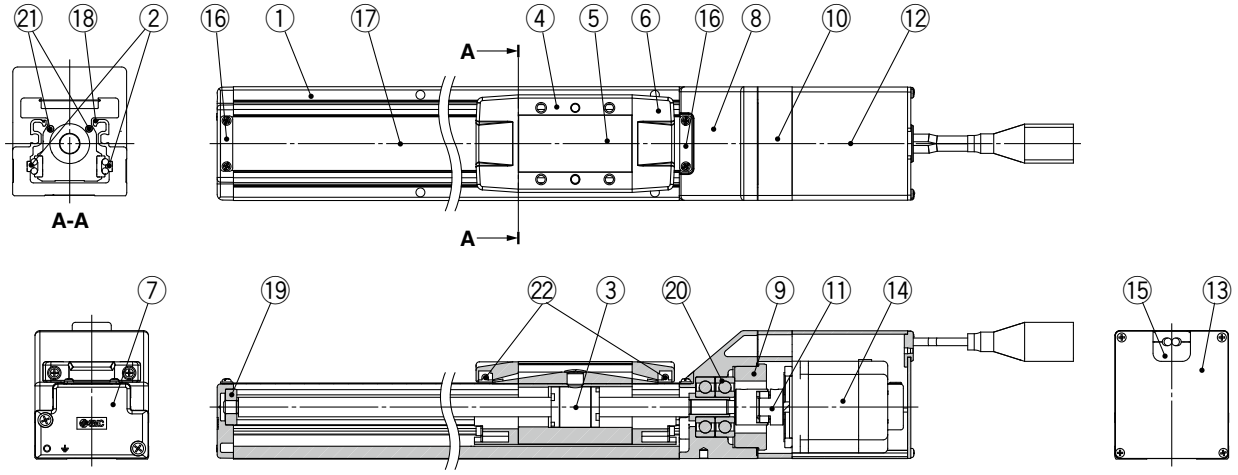

Component Parts

No.	Description	Material	Note
1	**Body**	Aluminum alloy	Anodized
2	**Rail guide**	—	
3	**Ball screw assembly**	—	
4	**Table**	Aluminum alloy	Anodized
5	**Blanking plate**	Aluminum alloy	Anodized
6	**Seal band holder**	Synthetic resin	
7	**Housing A**	Aluminum die-casted	Coating
8	**Housing B**	Aluminum die-casted	Coating
9	**Bearing stopper**	Aluminum alloy	
10	**Motor mount**	Aluminum alloy	Coating
11	**Coupling**	—	
12	**Motor cover**	Aluminum alloy	Anodized
13	**End cover**	Aluminum alloy	Anodized
14	**Motor**	—	

No.	Description	Material	Note
15	**Rubber bushing**	NBR	
16	**Band stopper**	Stainless steel	
17	**Dust seal band**	Stainless steel	
18	**Seal magnet**	—	
19	**Bearing**	—	Stroke 300 mm or more
20	**Bearing**	—	
21	**Magnet**	—	
22	**Roller assembly**	—	Without grease application

Replacement Parts/Grease Pack

Applied portion	Order no.
Ball screw	GR-S-010 (10 g) GR-S-020 (20 g)
Rail guide	
Dust seal band (When "Without" is selected for the grease application, grease is applied only on the back side.)	

Construction: Right/Left Side Parallel Motor

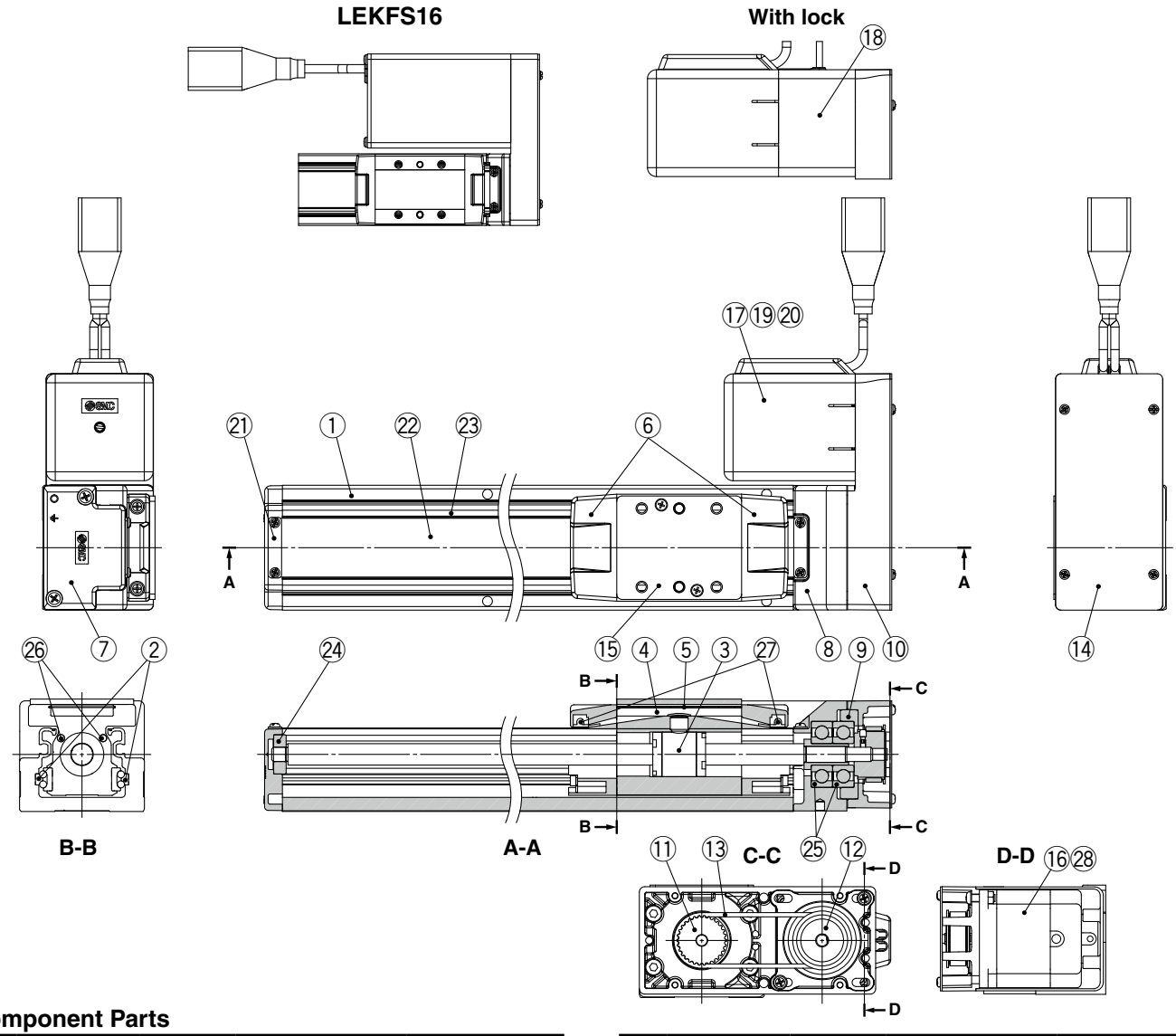

Component Parts

No.	Description		Material	Note
1	**Body**		Aluminum alloy	Anodized
2	**Rail guide**		—	
3	**Ball screw assembly**		—	
4	**Table**		Aluminum alloy	Anodized
5	**Blanking plate**		Aluminum alloy	Anodized
6	**Seal band holder**		Synthetic resin	
7	**Housing A**		Aluminum die-casted	Coating
8	**Housing B**		Aluminum die-casted	Coating
9	**Bearing stopper**		Aluminum alloy	
10	**Return plate**		Aluminum alloy	Coating/Anodized
11	**Pulley**		Aluminum alloy	
12	**Pulley**		Aluminum alloy	
14	**Cover plate**		Aluminum alloy	Anodized
15	**Table spacer**	**LEKFS32**	Aluminum alloy	Anodized (LEFS32 only)
16	**Motor**		—	
17	**Motor cover**	**LEKFS16**	Aluminum alloy	Anodized
		LEKFS25/32/40	Synthetic resin	
18	**Motor cover with lock**	**LEKFS25/32/40**	Aluminum alloy	Anodized
19	**End cover**	**LEKFS16**	Aluminum alloy	Anodized
20	**Rubber bushing**	**LEKFS16**	NBR	
21	**Band stopper**		Stainless steel	

No.	Description		Material	Note
22	**Dust seal band**		Stainless steel	
23	**Seal magnet**		—	
24	**Bearing**		—	Stroke 300 mm or more
25	**Bearing**		—	
26	**Magnet**		—	
27	**Roller assembly**		—	Without grease application
28	**Heat dissipation sheet**	**LEKFS16**	—	

Replacement Parts/Belt

No.	Size	Order no.
13	16	LE-D-6-5
	25	LE-D-6-2
	32	LE-D-6-3
	40	LE-D-6-4

Replacement Parts/Grease Pack

Applied portion	Order no.
Ball screw	GR-S-010 (10 g) GR-S-020 (20 g)
Rail guide	
Dust seal band (When "Without" is selected for the grease application, grease is applied only on the back side.)	

Dimensions: In-line Motor

LEKFS16E

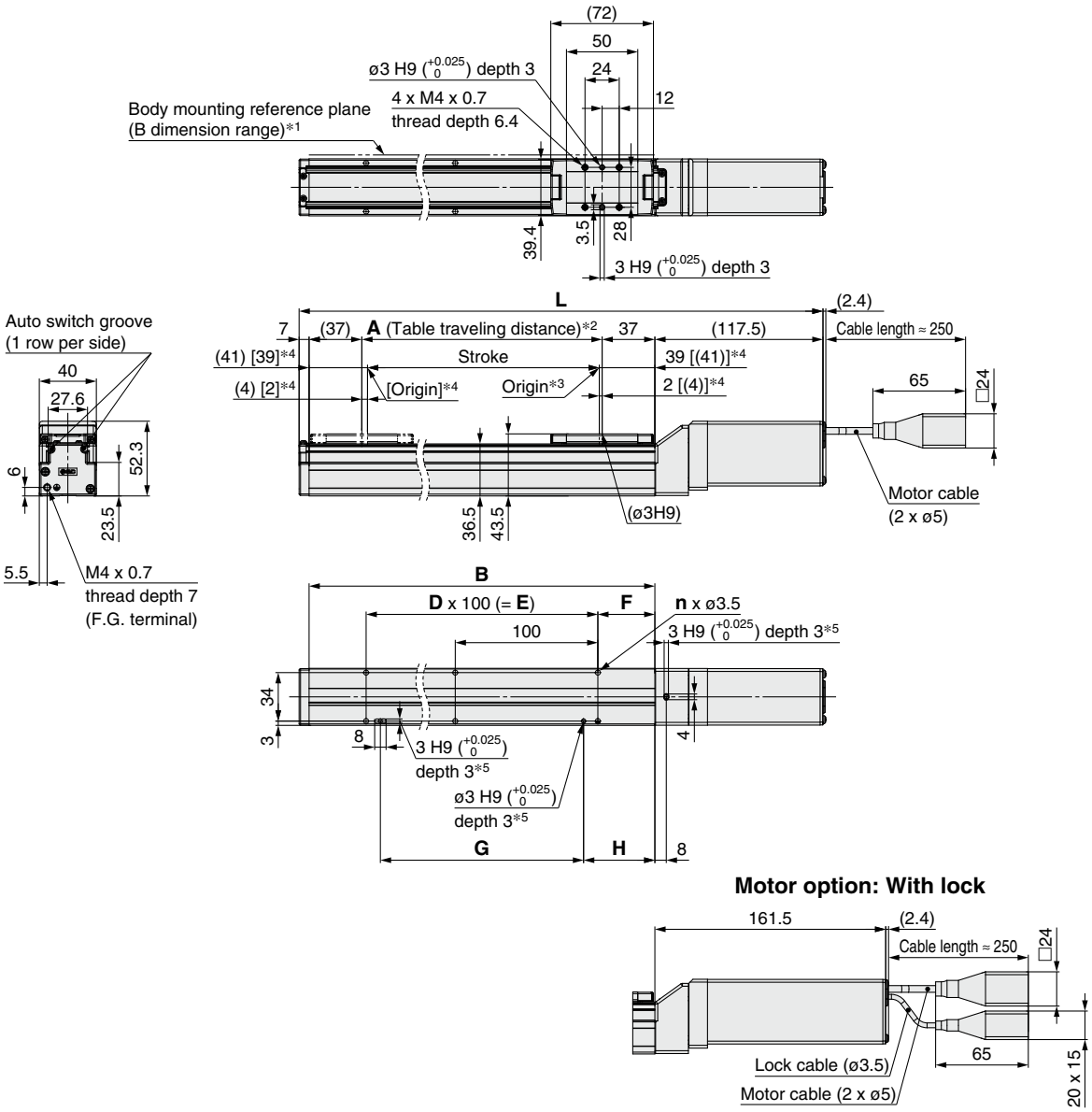

Motor option: With lock

*1 When mounting the actuator using the body mounting reference plane, set the height of the opposite surface or pin to be 3 mm or more. (Recommended height: 5 mm)
In addition, be aware that surfaces other than the body mounting reference plane (B dimension range) may slightly protrude from the body mounting reference plane. Be sure to provide a clearance of 1 mm or more to avoid interference with workpieces, facilities, etc.
*2 This is the distance within which the table can move when it returns to origin. Make sure that workpieces mounted on the table do not interfere with other workpieces or the facilities around the table.
*3 Position after returning to origin
*4 [ ] for when the direction of return to origin has changed
*5 When using the positioning pin holes on the bottom, use either the one on the body side or the one on the housing side.

Dimensions [mm]

Model	L		A	B	n	D	E	F	G	H
	Without lock	With lock								
LEKFS16E□-50□	254.5	298.5	56	130	4	—	—	15	80	25
LEKFS16E□-100□	304.5	348.5	106	180				40		50
LEKFS16E□-150□	354.5	398.5	156	230						
LEKFS16E□-200□	404.5	448.5	206	280	6	2	200		180	
LEKFS16E□-250□	454.5	498.5	256	330						
LEKFS16E□-300□	504.5	548.5	306	380	8	3	300		280	
LEKFS16E□-350□	554.5	598.5	356	430						
LEKFS16E□-400□	604.5	648.5	406	480	10	4	400		380	
LEKFS16E□-450□	654.5	698.5	456	530						
LEKFS16E□-500□	704.5	748.5	506	580	12	5	500		480	

Dimensions: In-line Motor

LEKFS25E

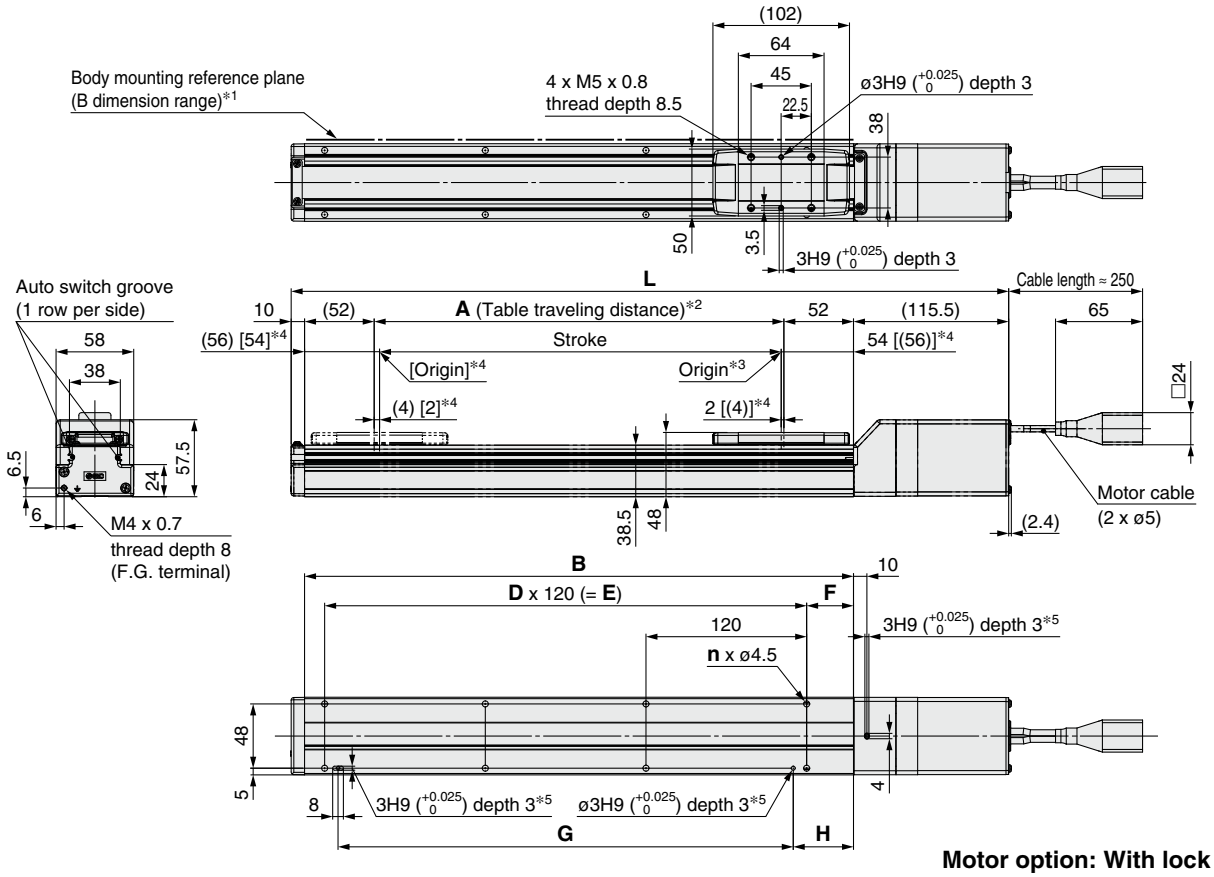

Motor option: With lock

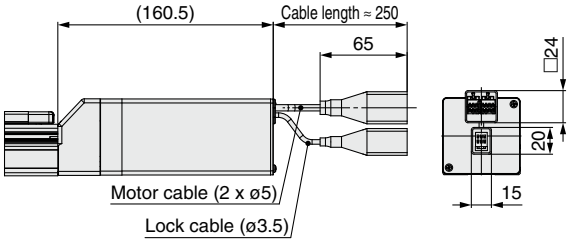

*1 When mounting the actuator using the body mounting reference plane, set the height of the opposite surface or pin to be 3 mm or more. (Recommended height: 5 mm)
In addition, be aware that surfaces other than the body mounting reference plane (B dimension range) may slightly protrude from the body mounting reference plane. Be sure to provide a clearance of 1 mm or more to avoid interference with workpieces, facilities, etc.
*2 This is the distance within which the table can move when it returns to origin. Make sure that workpieces mounted on the table do not interfere with other workpieces or the facilities around the table.
*3 Position after returning to origin
*4 [ ] for when the direction of return to origin has changed
*5 When using the positioning pin holes on the bottom, use either the one on the body side or the one on the housing side.

Dimensions [mm]

Model	L		A	B	n	D	E	F	G	H
	Without lock	With lock								
LEKFS25E□-50□	285.5	330.5	56	160	4	—	—	20	100	30
LEKFS25E□-100□	335.5	380.5	106	210				35		45
LEKFS25E□-150□	385.5	430.5	156	260						
LEKFS25E□-200□	435.5	480.5	206	310	6	2	240		220	
LEKFS25E□-250□	485.5	530.5	256	360						
LEKFS25E□-300□	535.5	580.5	306	410	8	3	360		340	
LEKFS25E□-350□	585.5	630.5	356	460						
LEKFS25E□-400□	635.5	680.5	406	510						
LEKFS25E□-450□	685.5	730.5	456	560	10	4	480		460	
LEKFS25E□-500□	735.5	780.5	506	610						
LEKFS25E□-600□	835.5	880.5	606	710	12	5	600		580	
LEKFS25E□-700□	935.5	980.5	706	810	14	6	720		700	
LEKFS25E□-800□	1035.5	1080.5	806	910	16	7	840		820	

Dimensions: In-line Motor

LEKFS32E

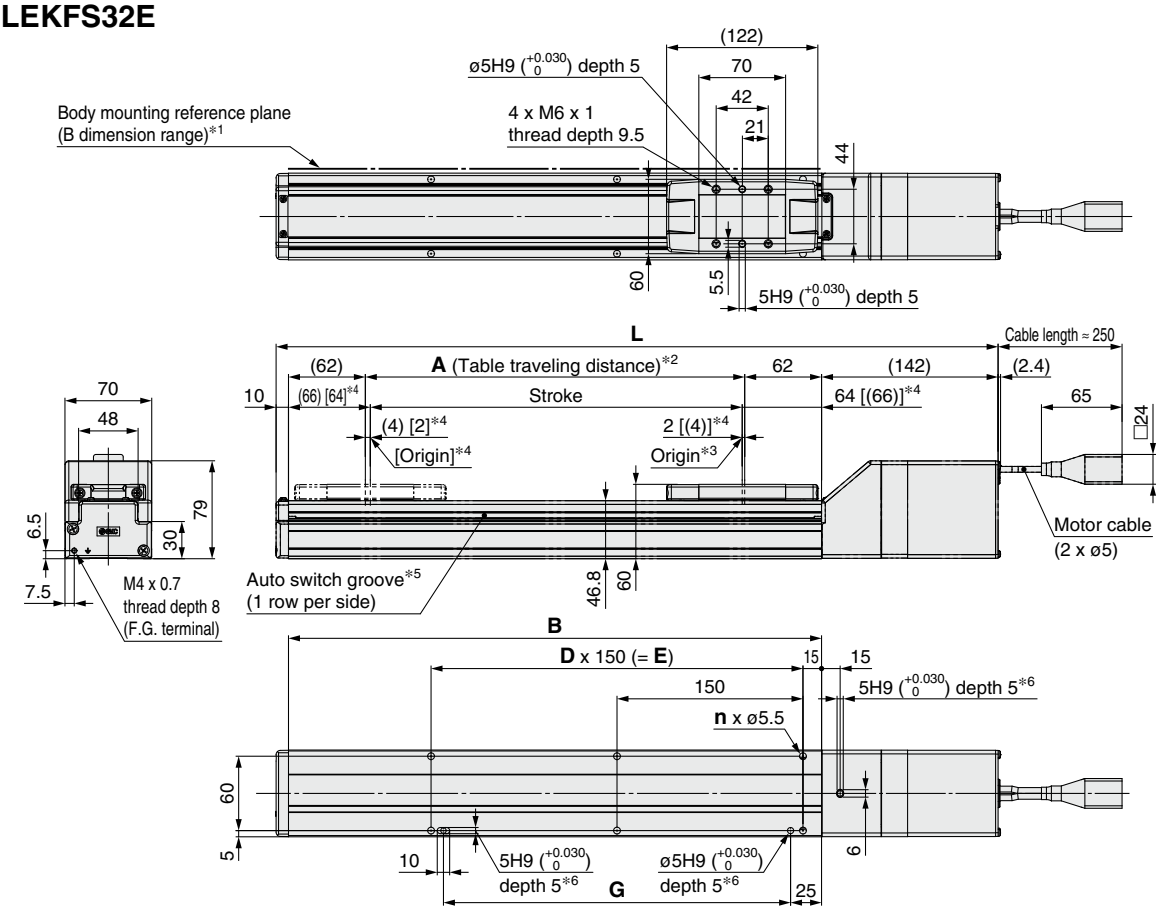

Motor option: With lock

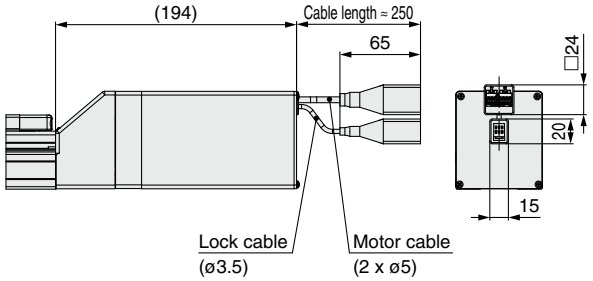

*1 When mounting the actuator using the body mounting reference plane, set the height of the opposite surface or pin to be 3 mm or more. (Recommended height: 5 mm)
In addition, be aware that surfaces other than the body mounting reference plane (B dimension range) may slightly protrude from the body mounting reference plane. Be sure to provide a clearance of 1 mm or more to avoid interference with workpieces, facilities, etc.
*2 This is the distance within which the table can move when it returns to origin. Make sure that workpieces mounted on the table do not interfere with other workpieces or the facilities around the table.
*3 Position after returning to origin
*4 [ ] for when the direction of return to origin has changed
*5 A switch spacer (BMY3-016) is required to secure auto switches. Please order it separately.
*6 When using the positioning pin holes on the bottom, use either the one on the body side or the one on the housing side.

Dimensions [mm]

Model	L		A	B	n	D	E	G
	Without lock	With lock						
LEKFS32E□-50□	332	384	56	180	4	—	—	130
LEKFS32E□-100□	382	434	106	230				
LEKFS32E□-150□	432	484	156	280				
LEKFS32E□-200□	482	534	206	330	6	2	300	280
LEKFS32E□-250□	532	584	256	380				
LEKFS32E□-300□	582	634	306	430				
LEKFS32E□-350□	632	684	356	480	8	3	450	430
LEKFS32E□-400□	682	734	406	530				
LEKFS32E□-450□	732	784	456	580				
LEKFS32E□-500□	782	834	506	630	10	4	600	580
LEKFS32E□-600□	882	934	606	730				
LEKFS32E□-700□	982	1034	706	830	12	5	750	730
LEKFS32E□-800□	1082	1134	806	930	14	6	900	880
LEKFS32E□-900□	1182	1234	906	1030				
LEKFS32E□-1000□	1282	1334	1006	1130	16	7	1050	1030

Dimensions: In-line Motor

LEKFS40E

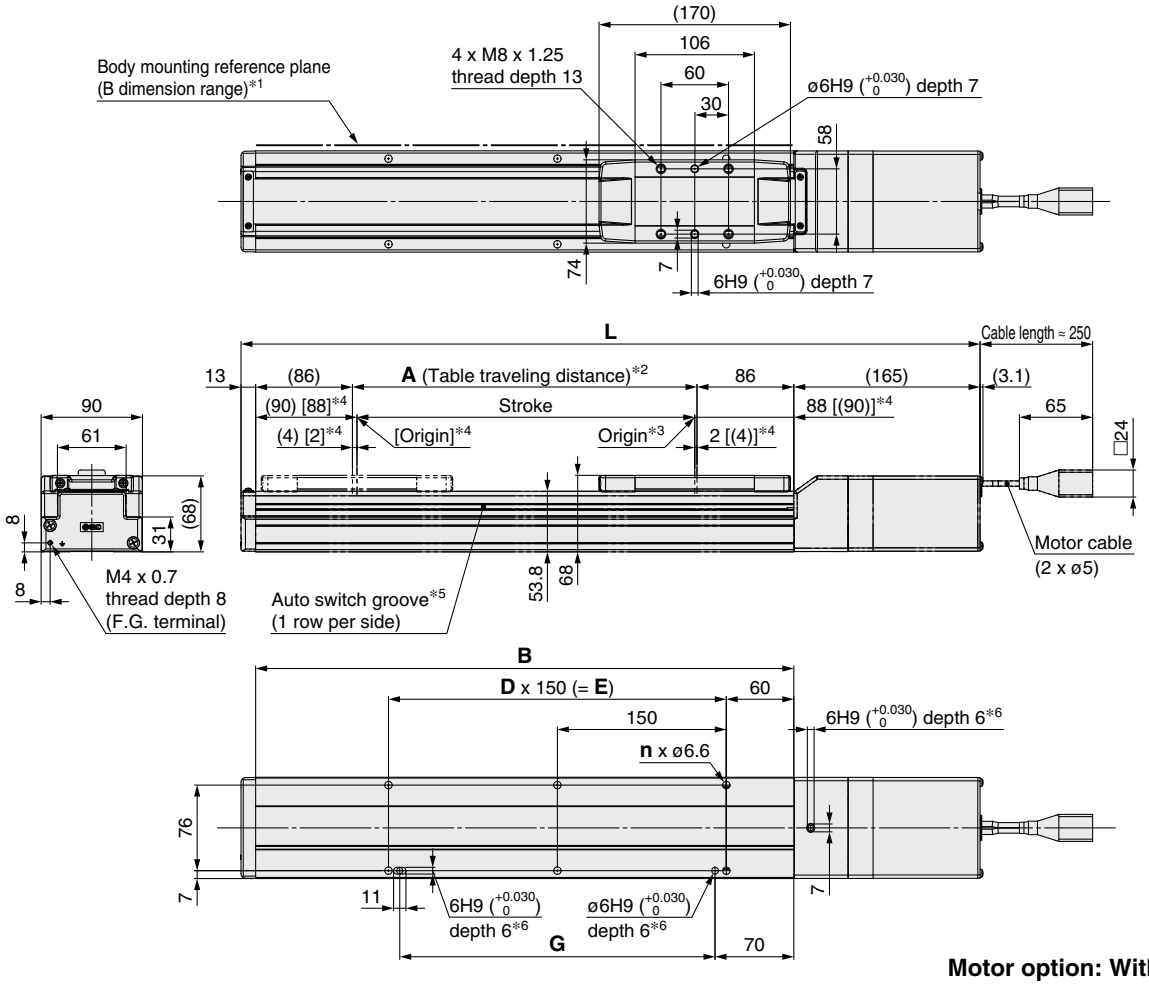

Motor option: With lock

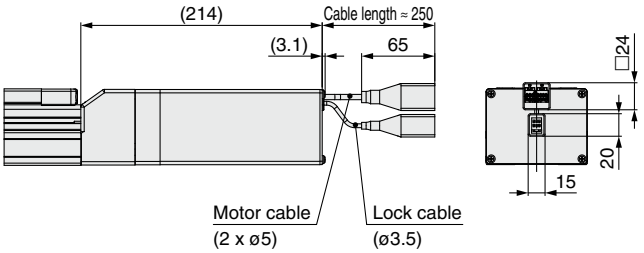

*1 When mounting the actuator using the body mounting reference plane, set the height of the opposite surface or pin to be 3 mm or more. (Recommended height: 5 mm)
In addition, be aware that surfaces other than the body mounting reference plane (B dimension range) may slightly protrude from the body mounting reference plane. Be sure to provide a clearance of 1 mm or more to avoid interference with workpieces, facilities, etc.
*2 This is the distance within which the table can move when it returns to origin. Make sure that workpieces mounted on the table do not interfere with other workpieces or the facilities around the table.
*3 Position after returning to origin
*4 [ ] for when the direction of return to origin has changed
*5 A switch spacer (BMY3-016) is required to secure auto switches. Please order it separately.
*6 When using the positioning pin holes on the bottom, use either the one on the body side or the one on the housing side.

Dimensions [mm]

Model	L		A	B	n	D	E	G
	Without lock	With lock						
LEKFS40E□-150□	506	555	156	328	4	—	—	130
LEKFS40E□-200□	556	605	206	378	6	2	300	280
LEKFS40E□-250□	606	655	256	428				
LEKFS40E□-300□	656	705	306	478				
LEKFS40E□-350□	706	755	356	528	8	3	450	430
LEKFS40E□-400□	756	805	406	578				
LEKFS40E□-450□	806	855	456	628				
LEKFS40E□-500□	856	905	506	678	10	4	600	580
LEKFS40E□-600□	956	1005	606	778				
LEKFS40E□-700□	1056	1105	706	878	12	5	750	730
LEKFS40E□-800□	1156	1205	806	978	14	6	900	880
LEKFS40E□-900□	1256	1305	906	1078				
LEKFS40E□-1000□	1356	1405	1006	1178	16	7	1050	1030
LEKFS40E□-1100□	1456	1505	1106	1278	18	8	1200	1180
LEKFS40E□-1200□	1556	1605	1206	1378				

Dimensions: Right/Left Side Parallel Motor

LEKFS16RE

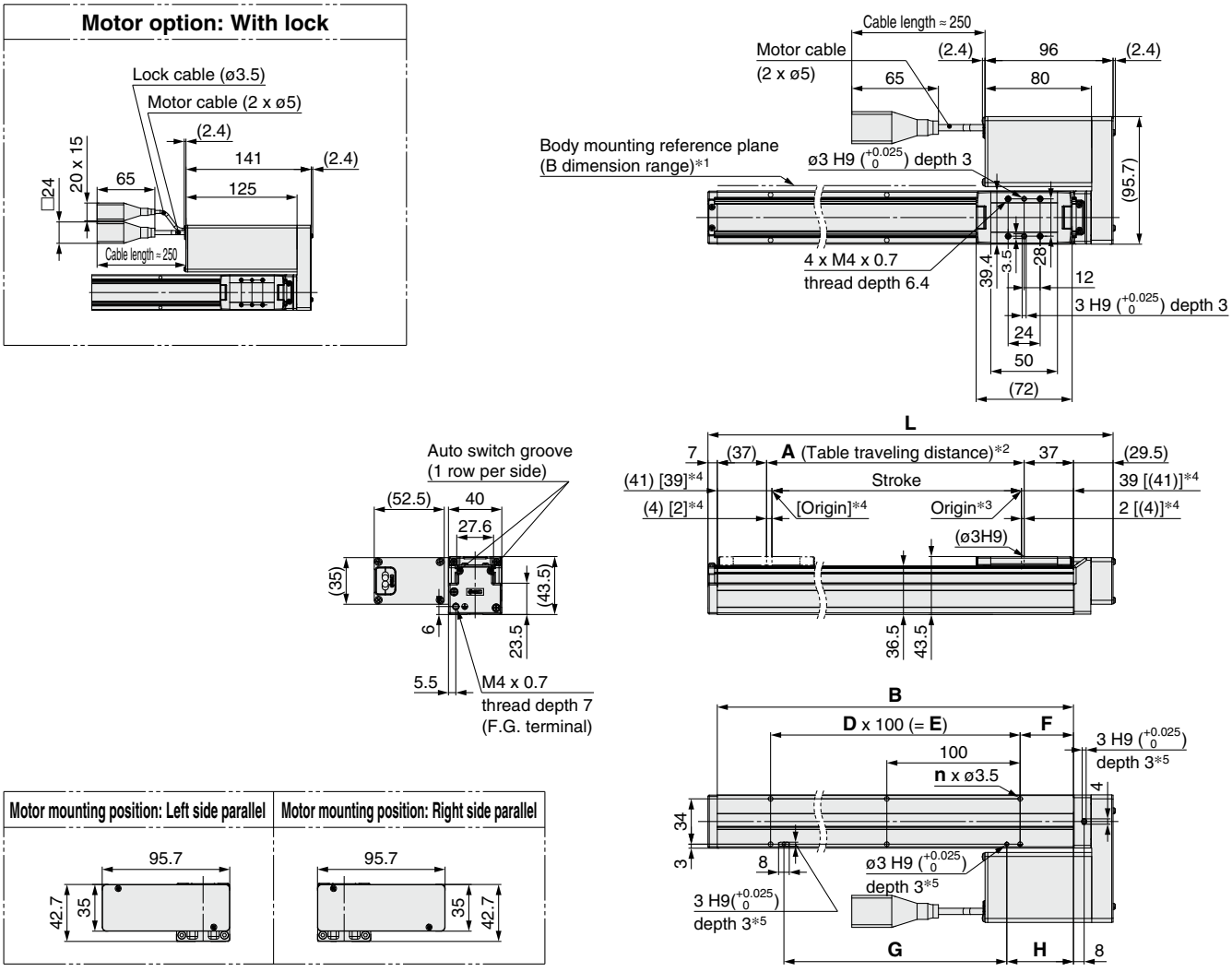

*1 When mounting the actuator using the body mounting reference plane, set the height of the opposite surface or pin to be 3 mm or more. (Recommended height: 5 mm) In addition, be aware that surfaces other than the body mounting reference plane (B dimension range) may slightly protrude from the body mounting reference plane. Be sure to provide a clearance of 1 mm or more to avoid interference with workpieces, facilities, etc.

*2 This is the distance within which the table can move when it returns to origin. Make sure that workpieces mounted on the table do not interfere with other workpieces or the facilities around the table.

*3 Position after returning to origin

*4 [ ] for when the direction of return to origin has changed

*5 When using the positioning pin holes on the bottom, use either the one on the body side or the one on the housing side.

Dimensions [mm]

Model	L	A	B	n	D	E	F	G	H
LEKFS16□E□-50□	166.5	56	130	4	—	—	15	80	25
LEKFS16□E□-100□	216.5	106	180				40		50
LEKFS16□E□-150□	266.5	156	230						
LEKFS16□E□-200□	316.5	206	280	6	2	200		180	
LEKFS16□E□-250□	366.5	256	330						
LEKFS16□E□-300□	416.5	306	380	8	3	300		280	
LEKFS16□E□-350□	466.5	356	430						
LEKFS16□E□-400□	516.5	406	480	10	4	400		380	
LEKFS16□E□-450□	566.5	456	530						
LEKFS16□E□-500□	616.5	506	580	12	5	500		480	

Dimensions: Right/Left Side Parallel Motor

LEKFS25RE

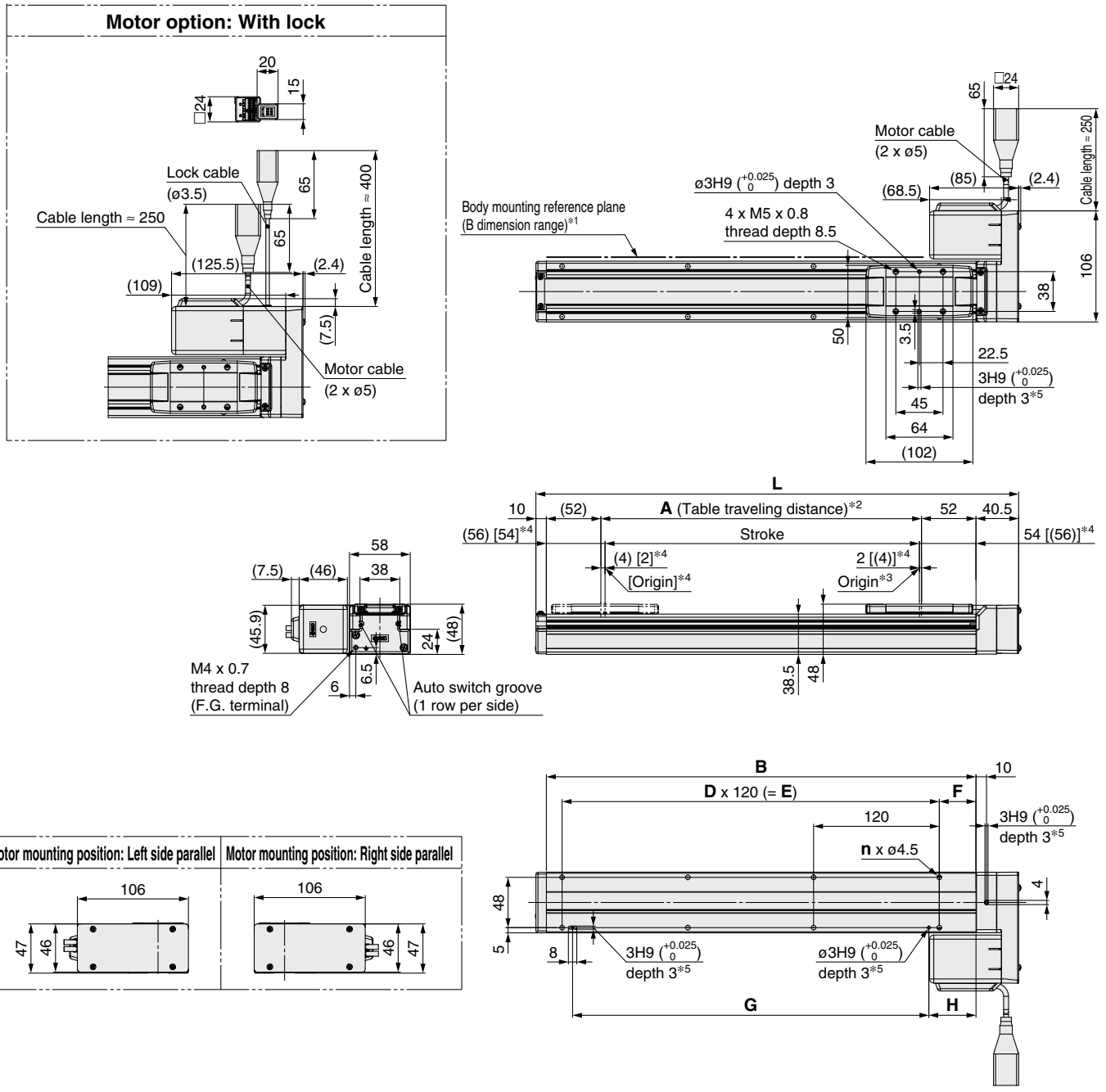

*1 When mounting the actuator using the body mounting reference plane, set the height of the opposite surface or pin to be 3 mm or more. (Recommended height: 5 mm)
In addition, be aware that surfaces other than the body mounting reference plane (B dimension range) may slightly protrude from the body mounting reference plane. Be sure to provide a clearance of 1 mm or more to avoid interference with workpieces, facilities, etc.

*2 This is the distance within which the table can move when it returns to origin. Make sure workpieces mounted on the table do not interfere with other workpieces or the facilities around the table.

*3 Position after returning to origin

*4 [ ] for when the direction of return to origin has changed

*5 When using the positioning pin holes on the bottom, use either the one on the body side or the one on the housing side.

* This illustration shows the motor mounting position for the right side parallel type.

Dimensions [mm]

Model	L	A	B	n	D	E	F	G	H
LEKFS25□E□-50□	210.5	56	160	4	—	—	20	100	30
LEKFS25□E□-100□	260.5	106	210				35		45
LEKFS25□E□-150□	310.5	156	260						
LEKFS25□E□-200□	360.5	206	310	6	2	240		220	
LEKFS25□E□-250□	410.5	256	360						
LEKFS25□E□-300□	460.5	306	410	8	3	360		340	
LEKFS25□E□-350□	510.5	356	460						
LEKFS25□E□-400□	560.5	406	510						
LEKFS25□E□-450□	610.5	456	560	10	4	480		460	
LEKFS25□E□-500□	660.5	506	610						
LEKFS25□E□-600□	760.5	606	710	12	5	600		580	
LEKFS25□E□-700□	860.5	706	810	14	6	720		700	
LEKFS25□E□-800□	960.5	806	910	16	7	840		820	

Dimensions: Right/Left Side Parallel Motor

LEKFS32RE

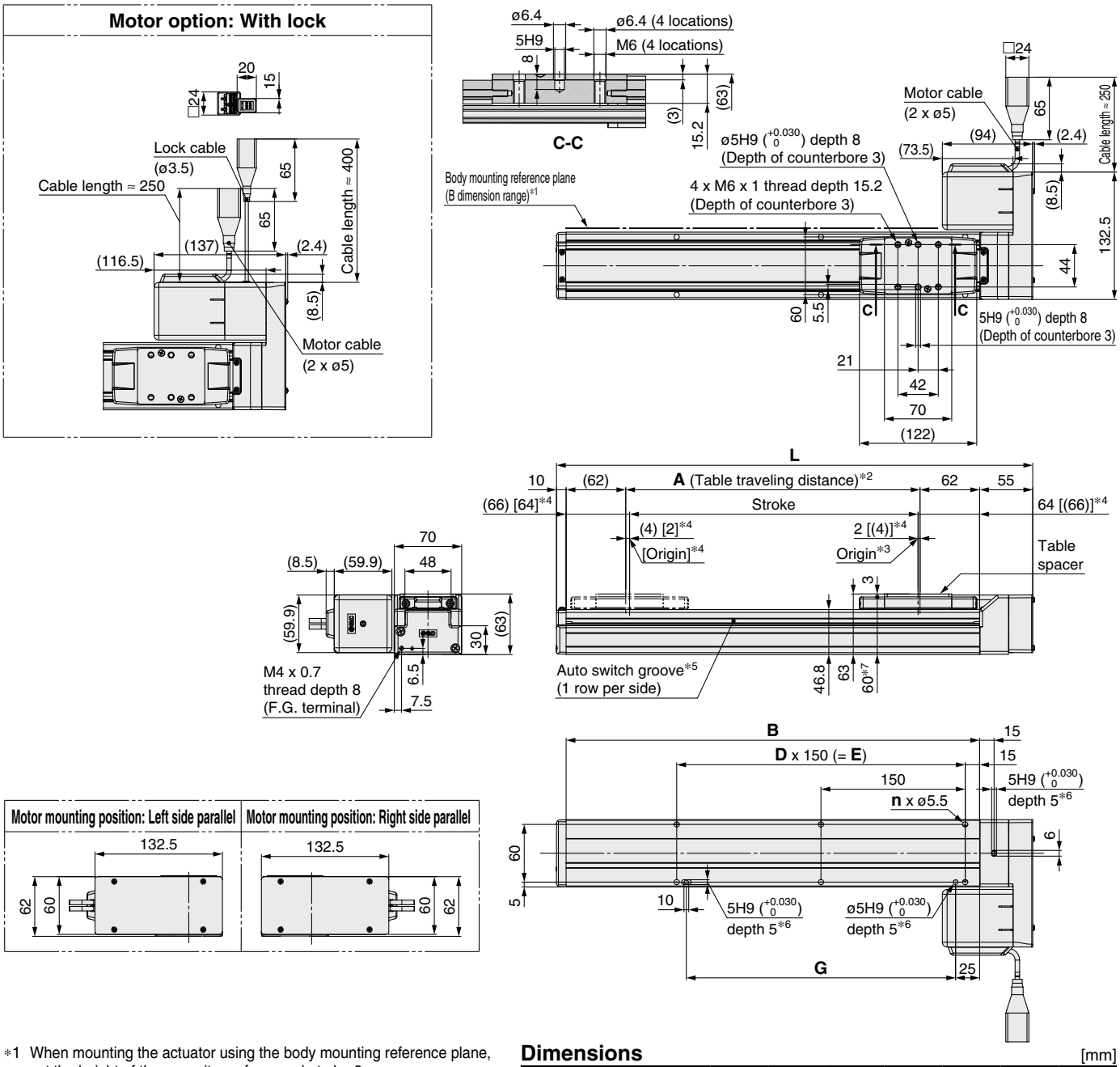

∗1 When mounting the actuator using the body mounting reference plane, set the height of the opposite surface or pin to be 3 mm or more. (Recommended height: 5 mm)
In addition, be aware that surfaces other than the body mounting reference plane (B dimension range) may slightly protrude from the body mounting reference plane. Be sure to provide a clearance of 1 mm or more to avoid interference with workpieces, facilities, etc.

∗2 This is the distance within which the table can move when it returns to origin. Make sure that workpieces mounted on the table do not interfere with other workpieces or the facilities around the table.

∗3 Position after returning to origin

∗4 [ ] for when the direction of return to origin has changed

∗5 A switch spacer (BMY3-016) is required to secure auto switches. Please order it separately.

∗6 When using the positioning pin holes on the bottom, use either the one on the body side or the one on the housing side.

∗7 When the table spacer is removed

∗ This illustration shows the motor mounting position for the right side parallel type.

Dimensions [mm]

Model	L	A	B	n	D	E	G
LEKFS32□E□-50□	245	56	180	4	—	—	130
LEKFS32□E□-100□	295	106	230				
LEKFS32□E□-150□	345	156	280				
LEKFS32□E□-200□	395	206	330	6	2	300	280
LEKFS32□E□-250□	445	256	380				
LEKFS32□E□-300□	495	306	430				
LEKFS32□E□-350□	545	356	480	8	3	450	430
LEKFS32□E□-400□	595	406	530				
LEKFS32□E□-450□	645	456	580				
LEKFS32□E□-500□	695	506	630	10	4	600	580
LEKFS32□E□-600□	795	606	730				
LEKFS32□E□-700□	895	706	830	12	5	750	730
LEKFS32□E□-800□	995	806	930	14	6	900	880
LEKFS32□E□-900□	1095	906	1030				
LEKFS32□E□-1000□	1195	1006	1130	16	7	1050	1030

Dimensions: Right/Left Side Parallel Motor

LEKFS40RE

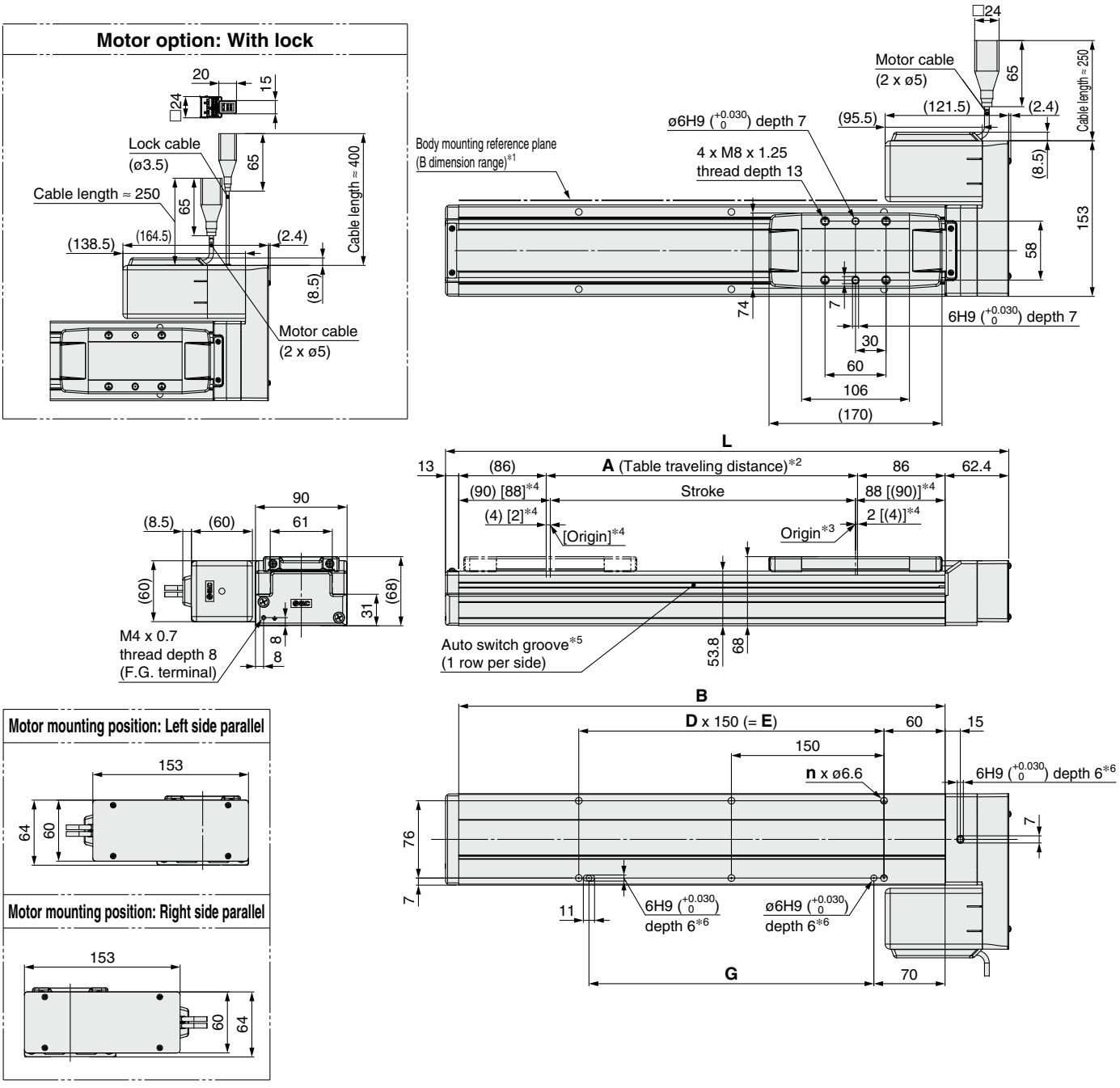

∗1 When mounting the actuator using the body mounting reference plane, set the height of the opposite surface or pin to be 3 mm or more. (Recommended height: 5 mm)
In addition, be aware that surfaces other than the body mounting reference plane (B dimension range) may slightly protrude from the body mounting reference plane. Be sure to provide a clearance of 1 mm or more to avoid interference with workpieces, facilities, etc.

∗2 This is the distance within which the table can move when it returns to origin. Make sure that workpieces mounted on the table do not interfere with other workpieces or the facilities around the table.

∗3 Position after returning to origin

∗4 [ ] for when the direction of return to origin has changed

∗5 A switch spacer (BMY3-016) is required to secure auto switches. Please order it separately.

∗6 When using the positioning pin holes on the bottom, use either the one on the body side or the one on the housing side.

∗ This illustration shows the motor mounting position for the right side parallel type.

Dimensions [mm]

Model	L	A	B	n	D	E	G
LEKFS40□E□-150□	403.4	156	328	4	—	150	130
LEKFS40□E□-200□	453.4	206	378	6	2	300	280
LEKFS40□E□-250□	503.4	256	428				
LEKFS40□E□-300□	553.4	306	478				
LEKFS40□E□-350□	603.4	356	528	8	3	450	430
LEKFS40□E□-400□	653.4	406	578				
LEKFS40□E□-450□	703.4	456	628				
LEKFS40□E□-500□	753.4	506	678	10	4	600	580
LEKFS40□E□-600□	853.4	606	778				
LEKFS40□E□-700□	953.4	706	878	12	5	750	730
LEKFS40□E□-800□	1053.4	806	978	14	6	900	880
LEKFS40□E□-900□	1153.4	906	1078				
LEKFS40□E□-1000□	1253.4	1006	1178	16	7	1050	1030
LEKFS40□E□-1100□	1353.4	1106	1278	18	8	1200	1180
LEKFS40□E□-1200□	1453.4	1206	1378				

High Rigidity and High Precision Slider Type
Ball Screw Drive
LEKFS Series LEKFS25, 32, 40

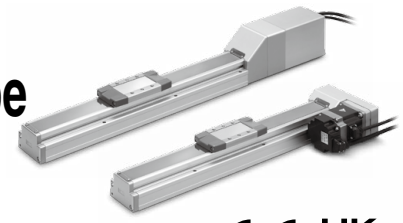

CE UKCA

For details, refer to page 128.

RoHS

LECY□ Series ▶ p. 60

How to Order

LEKFS **32** **R** **S3** **B** **–** **200** **□** **N** **–** **S** **2** **A2** **□**

❶ ❷ ❸ ❹ ❺ ❻ ❼ ❽ ❾ ❿ ⓫

❶ Size

25
32
40

❷ Motor mounting position

Nil	In-line
R	Right side parallel
L	Left side parallel

❹ Lead [mm]

Symbol	LEKFS25	LEKFS32	LEKFS40
H	20	24	30
A	12	16	20
B	6	8	10

❺ Stroke [mm]

50	50
to	to
1200	1200

∗ For details, refer to the applicable stroke table below.

❻ Motor option

Nil	Without option
B	With lock

❸ Motor type

Symbol	Type	Output [W]	❶ Size	⓾ Driver type	Compatible drivers
S2∗1	AC servo motor (Incremental encoder)	100	25	A1/A2	LECSA□-S1
S3		200	32	A1/A2	LECSA□-S3
S4		400	40	A2	LECSA2-S4
T6∗2	AC servo motor (Absolute encoder)	100	25	B2	LECSB2-T5
				C2	LECSC2-T5
				S2	LECSS2-T5
T7		200	32	B2	LECSB2-T7
				C2	LECSC2-T7
				S2	LECSS2-T7
T8		400	40	B2	LECSB2-T8
				C2	LECSC2-T8
				S2	LECSS2-T8

∗1 For motor type S2, the compatible driver part number suffix is S1.
∗2 For motor type T6, the compatible driver part number is LECS□2-T5.

❼ Grease application (Seal band part)

Nil	With
N	Without (Roller specification)

❽ Cable type∗1 ∗2

Nil	Without cable
S	Standard cable
R	Robotic cable (Flexible cable)

∗1 A motor cable and encoder cable are included with the product. (A lock cable is also included if motor option "B: With lock" is selected.)
∗2 Standard cable entry direction is "(B) Counter axis side." For the right/left side parallel motor types of the ball screw drive, the cable entry direction is "(A) Axis side." (For details, refer to page 111.)

❾ Cable length∗1 [m]

Nil	Without cable
2	2
5	5
A	10

∗1 The length of the encoder, motor and lock cables are the same.

⓾ Driver type

	Compatible drivers	Power supply voltage [V]	Size 25	Size 32	Size 40
Nil	Without driver	—	●	●	●
A1	LECSA1-S□	100 to 120	●	●	—
A2	LECSA2-S□	200 to 230	●	●	●
B2	LECSB2-T□	200 to 240	●	●	●
C2	LECSC2-T□	200 to 230	●	●	●
S2	LECSS2-T□	200 to 240	●	●	●

∗ When a driver type is selected, a cable is included. Select the cable type and cable length.
Example) S2S2: Standard cable (2 m) + Driver (LECSS2)
S2: Standard cable (2 m)
Nil: Without cable and driver

⓫ I/O cable length [m]∗1

Nil	Without cable
H	Without cable (Connector only)
1	1.5

∗1 When "Nil: Without driver" is selected for the driver type, only "Nil: Without cable" can be selected. Refer to page 112 if an I/O cable is required. (Options are shown on page 112.)

Support Guide/LEFG Series
The support guide was designed to support workpieces with significant overhang. (**Web Catalog**)

Applicable Stroke Table

●: Standard

Size	Stroke 50	100	150	200	250	300	350	400	450	500	600	700	800	900	1000	1100	1200
25	●	●	●	●	●	●	●	●	●	●	●	●	●	—	—	—	—
32	●	●	●	●	●	●	●	●	●	●	●	●	●	●	●	—	—
40	—	—	●	●	●	●	●	●	●	●	●	●	●	●	●	●	●

∗ Please contact SMC for non-standard strokes as they are produced as special orders.

Compatible Drivers

For auto switches, refer to pages 70 to 73.

Driver type	Pulse input type/ Positioning type	Pulse input type	CC-Link direct input type	SSCNETⅢ/H type
Series	**LECSA**	**LECSB-T**	**LECSC-T**	**LECSS-T**
Number of point tables	Up to 7	Up to 255	Up to 255 (2 stations occupied)	—
Pulse input	○	○	—	—
Applicable network	—	—	CC-Link	SSCNETⅢ/H
Control encoder	Incremental 17-bit encoder	Absolute 22-bit encoder	Absolute 18-bit encoder	Absolute 22-bit encoder
Communication function	USB communication	USB communication, RS422 communication		USB communication
Power supply voltage [V]	100 to 120 VAC (50/60 Hz), 200 to 230 VAC (50/60 Hz)	200 to 240 VAC (50/60 Hz)	200 to 230 VAC (50/60 Hz)	200 to 240 VAC (50/60 Hz)
Reference page	96			

Specifications

AC Servo Motor

Model			LEKFS25			LEKFS32			LEKFS40		
Actuator specifications	Stroke [mm]		50 to 800			50 to 1000			150 to 1200		
	Work load [kg]*1	Horizontal	10	20	20	30	40	45	30	50	60
		Vertical	4	8	15	5	10	20	7	15	30
	Speed*2 [mm/s] Stroke range	Up to 400	1500	900	450	1500	1000	500	1500	1000	500
		401 to 500	1200	720	360	1500	1000	500	1500	1000	500
		501 to 600	900	540	270	1200	1000	500	1500	1000	500
		601 to 700	700	420	210	930	620	310	1410	940	470
		701 to 800	550	330	160	750	500	250	1140	760	380
		801 to 900	—	—	—	610	410	200	930	620	310
		901 to 1000	—	—	—	510	340	170	780	520	260
		1001 to 1100	—	—	—	—	—	—	500	440	220
		1101 to 1200	—	—	—	—	—	—	500	380	190
	Max. acceleration/deceleration [mm/s²]		20000 (Refer to the **Web Catalog** for limit according to work load and duty ratio.)								
	Positioning repeatability [mm]		±0.01								
	Lost motion [mm]*3		0.05								
	Lead [mm]		20	12	6	24	16	8	30	20	10
	Impact/Vibration resistance [m/s²]*4		50/20								
	Actuation type		Ball screw (LEKFS□), Ball screw + Belt (LEKFS□R/L)								
	Guide type		Linear guide								
	Operating temperature range [°C]		5 to 40								
	Operating humidity range [%RH]		90 or less (No condensation)								
	Enclosure		IP30								
Electric specifications	Motor output/Size		100 W/□40			200 W/□60			400 W/□60		
	Motor type		AC servo motor (100/200 VAC)								
	Encoder*7		Motor type S2, S3, S4: Incremental 17-bit encoder (Resolution: 131072 p/rev) Motor type T6, T7, T8: Absolute 22-bit encoder (Resolution: 4194304 p/rev) (For LECSB2-T□, LECSS2-T□) Motor type T6, T7, T8: Absolute 18-bit encoder (Resolution: 262144 p/rev) (For LECSC2-T□)								
	Power [W]*5		Max. power 445			Max. power 725			Max. power 1275		
Lock unit specifications	Type*6		Non-magnetizing lock								
	Holding force [N]		78	131	255	131	197	385	220	330	660
	Power consumption at 20°C [W]		6.3			7.9			7.9		
	Power supply voltage [V]		24 VDC (0/–10%)								

*1 For details, refer to the “Speed–Work Load Graph (Guide)” on page 28.
*2 The allowable speed changes according to the stroke.
*3 A reference value for correcting errors in reciprocal operation
*4 Impact resistance: No malfunction occurred when the actuator was tested with a drop tester in both an axial direction and a perpendicular direction to the lead screw. (The test was performed with the actuator in the initial state.)
Vibration resistance: No malfunction occurred in a test ranging between 45 to 2000 Hz. The test was performed in both an axial direction and a perpendicular direction to the lead screw. (The test was performed with the actuator in the initial state.)
*5 Indicates the max. power during operation (including the driver). When selecting the power supply capacity, refer to the power supply capacity in the operation manual of each driver.
*6 Only when motor option “With lock” is selected
*7 For motor types T6, T7, and T8, the resolution will change depending on the driver type.

Weight

Series		LEKFS25												
Stroke [mm]		50	100	150	200	250	300	350	400	450	500	600	700	800
Motor type	S2	2.0	2.1	2.3	2.4	2.6	2.7	2.8	2.9	3.1	3.2	3.5	3.8	4.1
	T6	2.1	2.2	2.4	2.5	2.7	2.8	2.9	3.0	3.2	3.3	3.6	3.9	4.2
Additional weight with lock [kg]		S2:0.2/T6:0.3												

Series		LEKFS32														
Stroke [mm]		50	100	150	200	250	300	350	400	450	500	600	700	800	900	1000
Motor type	S3	3.4	3.6	3.8	4.0	4.3	4.5	4.7	4.9	5.1	5.3	5.8	6.2	6.6	7.1	7.5
	T7	3.3	3.5	3.7	3.9	4.2	4.4	4.6	4.8	5.0	5.2	5.7	6.1	6.5	7.0	7.4
Additional weight with lock [kg]		S3:0.4/T7:0.5														

Series		LEKFS40														
Stroke [mm]		150	200	250	300	350	400	450	500	600	700	800	900	1000	1100	1200
Motor type	S4	5.9	6.2	6.5	6.8	7.1	7.4	7.7	8.0	8.6	9.2	9.8	10.4	11.0	11.6	12.2
	T8	6.0	6.3	6.6	6.9	7.2	7.5	7.8	8.1	8.7	9.3	9.9	10.5	11.1	11.7	12.3
Additional weight with lock [kg]		S4:0.5/T8:0.5														

Construction: In-line Motor

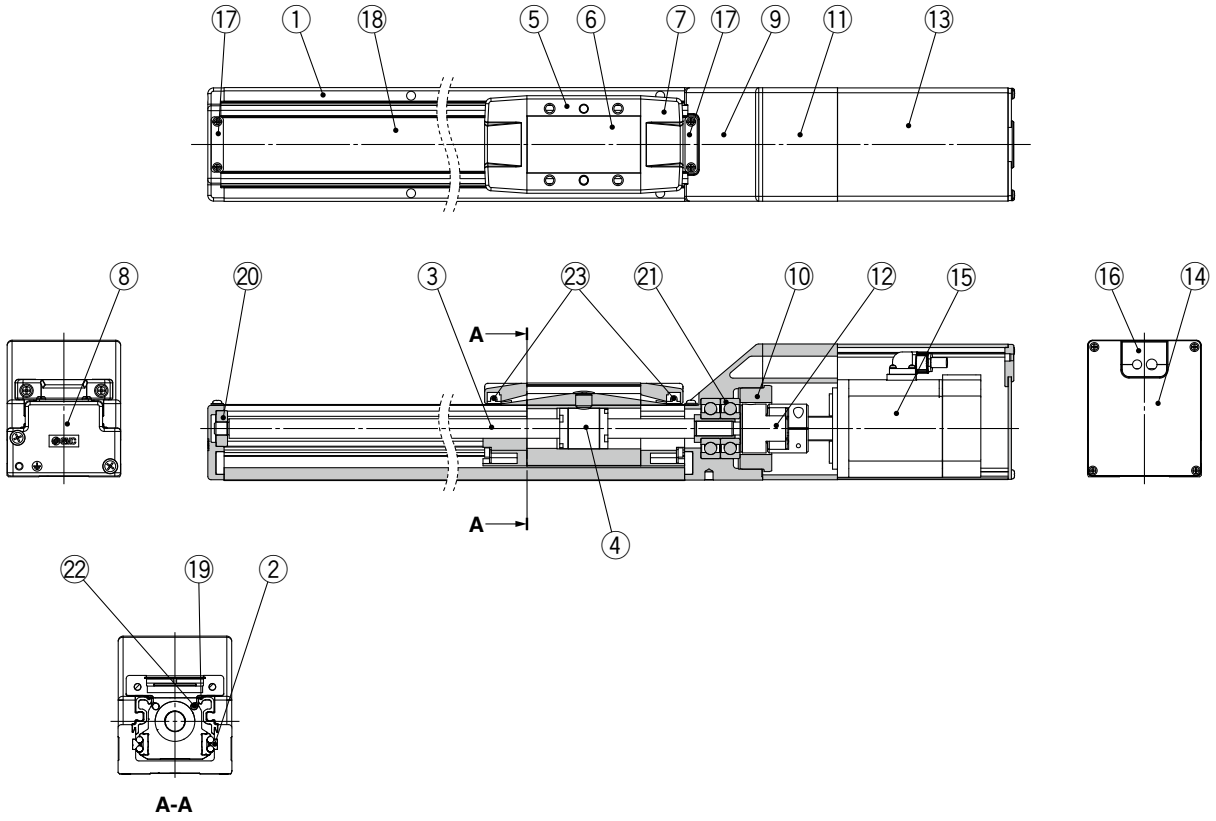

Component Parts

No.	Description	Material	Note
1	**Body**	Aluminum alloy	Anodized
2	**Rail guide**	—	
3	**Ball screw shaft**	—	
4	**Ball screw nut**	—	
5	**Table**	Aluminum alloy	Anodized
6	**Blanking plate**	Aluminum alloy	Anodized
7	**Seal band holder**	Synthetic resin	
8	**Housing A**	Aluminum die-casted	Coating
9	**Housing B**	Aluminum die-casted	Coating
10	**Bearing stopper**	Aluminum alloy	
11	**Motor mount**	Aluminum alloy	Coating
12	**Coupling**	—	
13	**Motor cover**	Aluminum alloy	Anodized
14	**End cover**	Aluminum alloy	Anodized
15	**Motor**	—	
16	**Rubber bushing**	NBR	
17	**Band stopper**	Stainless steel	
18	**Dust seal band**	Stainless steel	
19	**Seal magnet**	—	
20	**Bearing**	—	Stroke 300 mm or more
21	**Bearing**	—	
22	**Magnet**	—	
23	**Roller assembly**	—	Without grease application

Replacement Parts/Grease Pack

Applied portion	Order no.
Ball screw	GR-S-010 (10 g) GR-S-020 (20 g)
Rail guide	
Dust seal band (When "Without" is selected for the grease application, grease is applied only on the back side.)	

Construction: Right/Left Side Parallel Motor

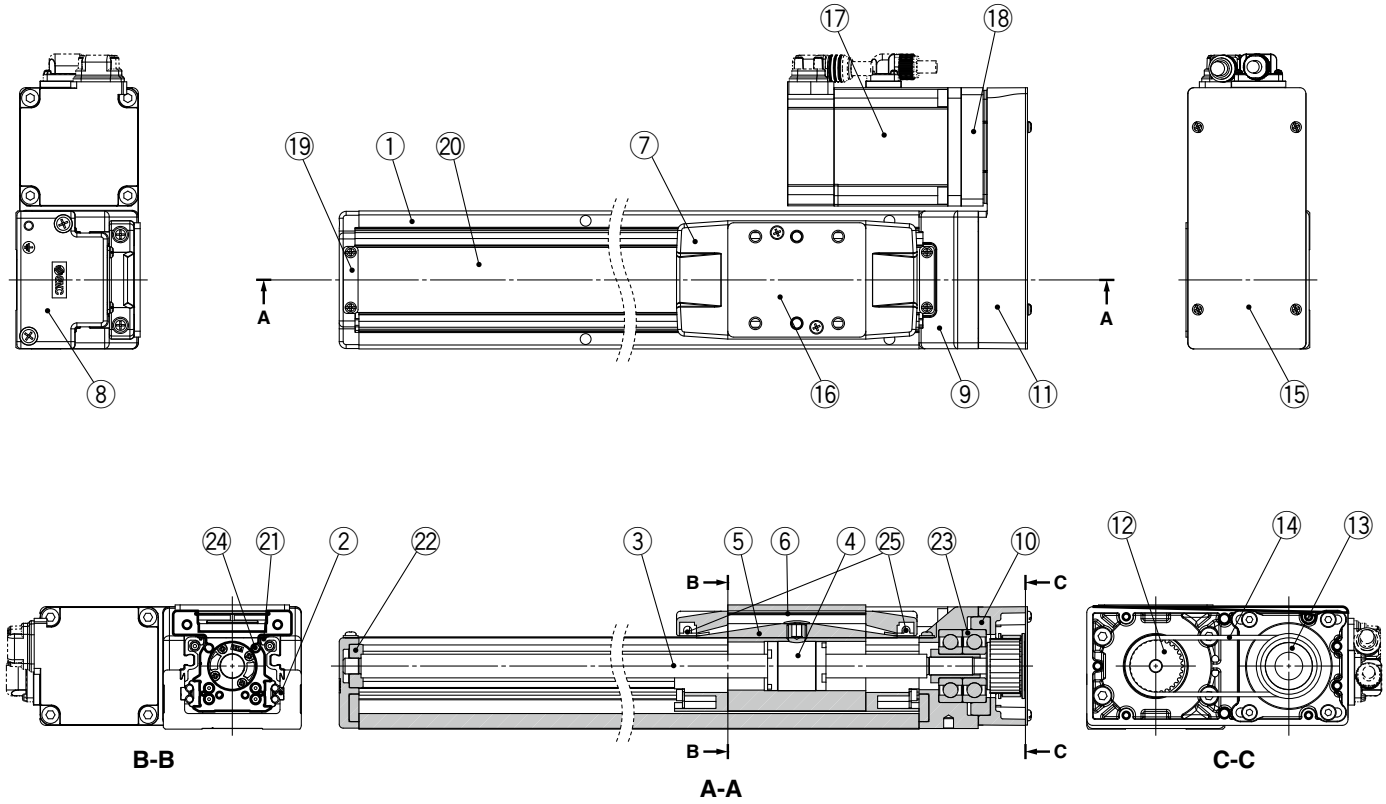

Component Parts

No.	Description	Material	Note
1	**Body**	Aluminum alloy	Anodized
2	**Rail guide**	—	
3	**Ball screw shaft**	—	
4	**Ball screw nut**	—	
5	**Table**	Aluminum alloy	Anodized
6	**Blanking plate**	Aluminum alloy	Anodized
7	**Seal band holder**	Synthetic resin	
8	**Housing A**	Aluminum die-casted	Coating
9	**Housing B**	Aluminum die-casted	Coating
10	**Bearing stopper**	Aluminum alloy	
11	**Return plate**	Aluminum alloy	Coating
12	**Pulley**	Aluminum alloy	
13	**Pulley**	Aluminum alloy	
15	**Cover plate**	Aluminum alloy	Anodized
16	**Table spacer** **LEKFS32**	Aluminum alloy	Anodized
17	**Motor**	—	
18	**Motor adapter**	Aluminum alloy	Coating
19	**Band stopper**	Stainless steel	
20	**Dust seal band**	Stainless steel	

No.	Description	Material	Note
21	**Seal magnet**	—	
22	**Bearing**	—	Stroke 300 mm or more
23	**Bearing**	—	
24	**Magnet**	—	
25	**Roller assembly**	—	Without grease application

Replacement Parts/Belt

No.	Size	Order no.
14	25	LE-D-6-2
	32	LE-D-6-3
	40	LE-D-6-4

Replacement Parts/Grease Pack

Applied portion	Order no.
Ball screw	GR-S-010 (10 g) GR-S-020 (20 g)
Rail guide	
Dust seal band (When "Without" is selected for the grease application, grease is applied only on the back side.)	

Dimensions: In-line Motor

LEKFS25

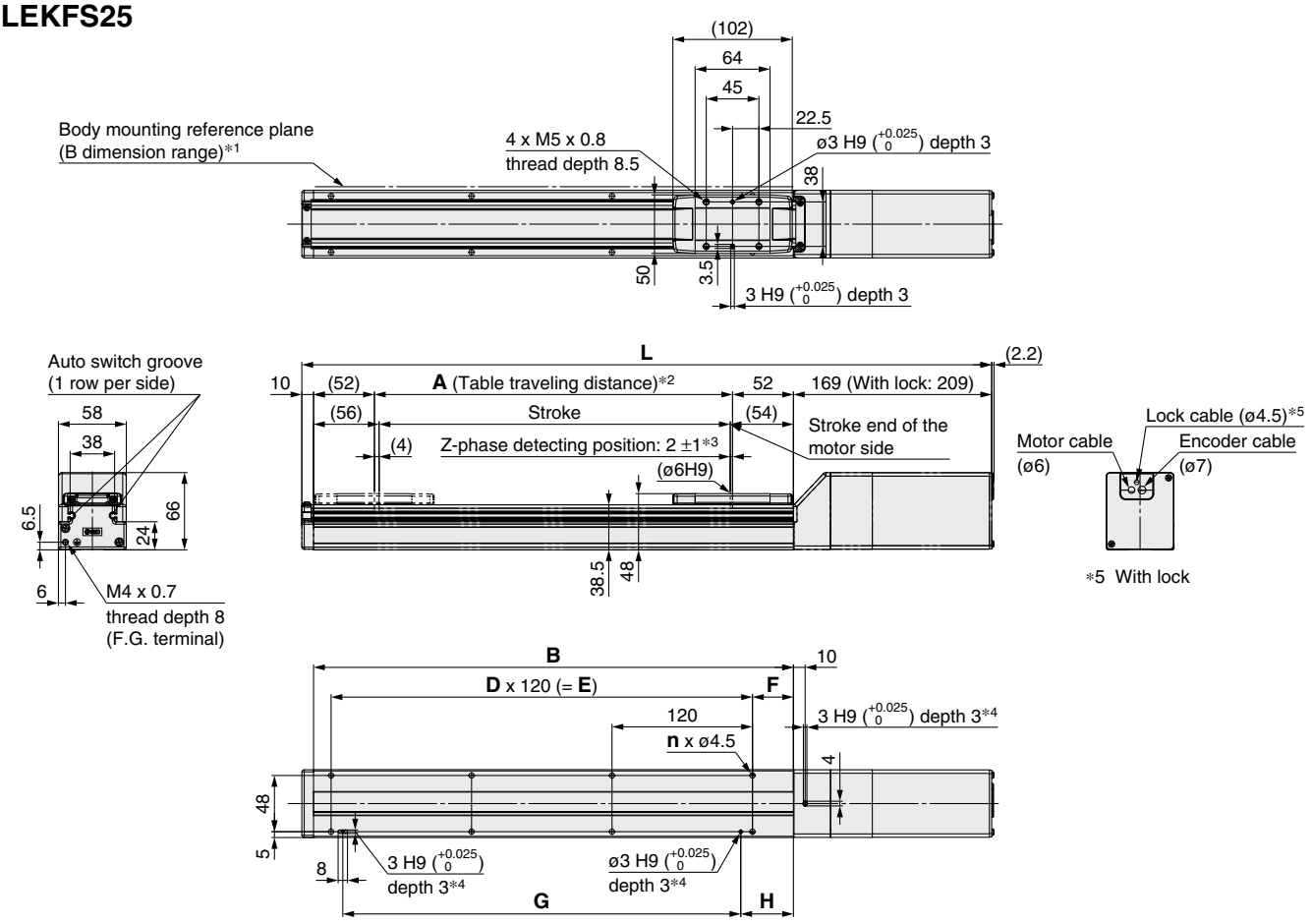

*1 When mounting the actuator using the body mounting reference plane, set the height of the opposite surface or pin to be 3 mm or more. (Recommended height: 5 mm)
In addition, be aware that surfaces other than the body mounting reference plane (B dimension range) may slightly protrude from the body mounting reference plane.
Be sure to provide a clearance of 1 mm or more to avoid interference with workpieces, facilities, etc.
*2 This is the distance within which the table can move when it returns to origin. Make sure that workpieces mounted on the table do not interfere with other workpieces or the facilities around the table.
*3 The Z-phase first detecting position from the stroke end of the motor side
*4 When using the body bottom positioning pin holes, do not simultaneously use the housing B bottom pin hole.

Dimensions

[mm]

Model	L		A	B	n	D	E	F	G	H
	Without lock	With lock								
LEKFS25□□-50□	339	379	56	160	4	—	—	20	100	30
LEKFS25□□-100□	389	429	106	210				35		45
LEKFS25□□-150□	439	479	156	260						
LEKFS25□□-200□	489	529	206	310	6	2	240		220	
LEKFS25□□-250□	539	579	256	360						
LEKFS25□□-300□	589	629	306	410	8	3	360		340	
LEKFS25□□-350□	639	679	356	460						
LEKFS25□□-400□	689	729	406	510						
LEKFS25□□-450□	739	779	456	560	10	4	480		460	
LEKFS25□□-500□	789	829	506	610						
LEKFS25□□-600□	889	929	606	710	12	5	600		580	
LEKFS25□□-700□	989	1029	706	810	14	6	720		700	
LEKFS25□□-800□	1089	1129	806	910	16	7	840		820	

Dimensions: In-line Motor

LEKFS32

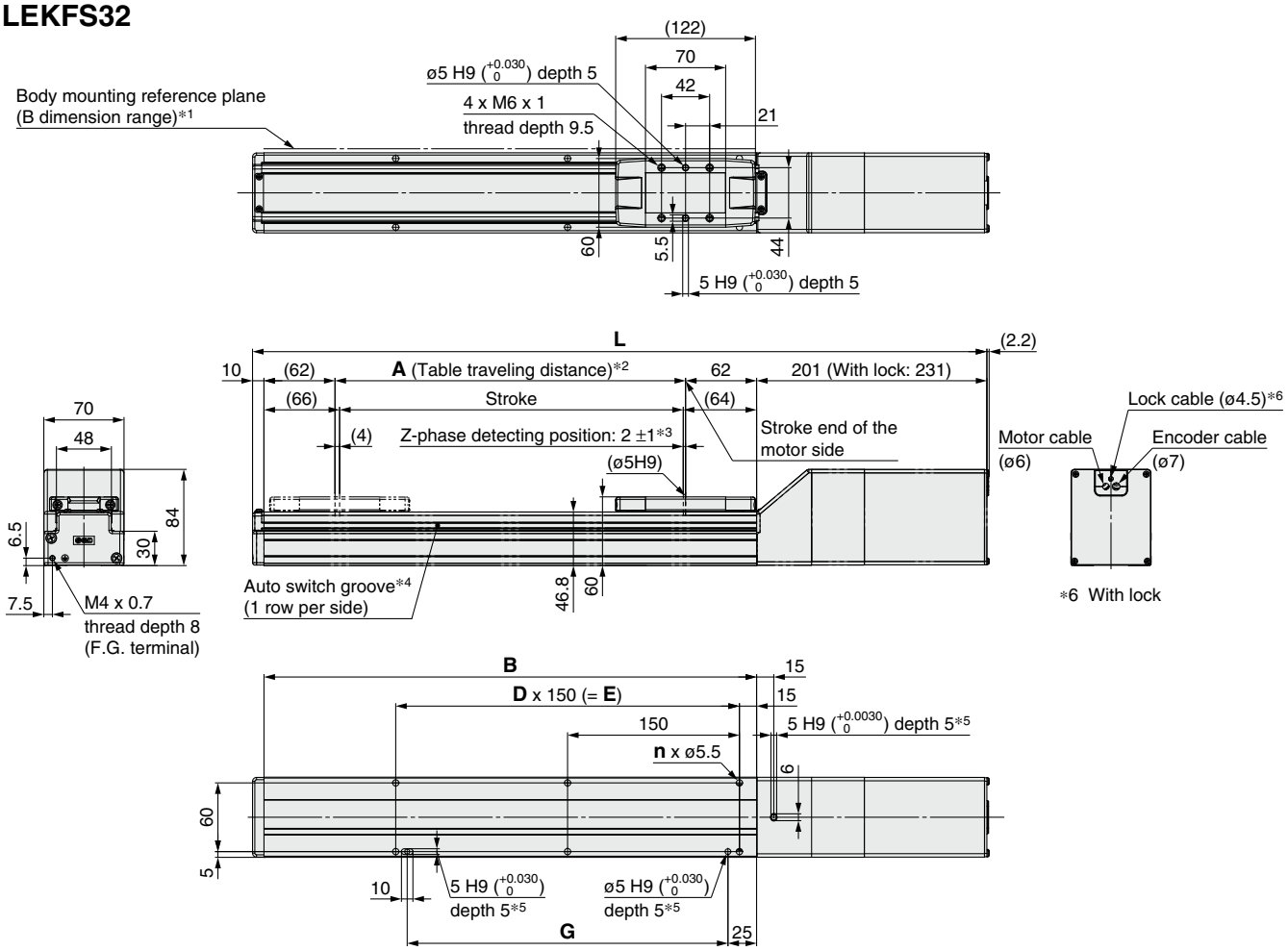

*1 When mounting the actuator using the body mounting reference plane, set the height of the opposite surface or pin to be 3 mm or more. (Recommended height: 5 mm)
In addition, be aware that surfaces other than the body mounting reference plane (B dimension range) may slightly protrude from the body mounting reference plane.
Be sure to provide a clearance of 1 mm or more to avoid interference with workpieces, facilities, etc.

*2 This is the distance within which the table can move when it returns to origin. Make sure that workpieces mounted on the table do not interfere with other workpieces or the facilities around the table.

*3 The Z-phase first detecting position from the stroke end of the motor side

*4 A switch spacer (BMY3-016) is required to secure auto switches. Please order it separately.

*5 When using the body bottom positioning pin holes, do not simultaneously use the housing B bottom pin hole.

Dimensions

[mm]

Model	L		A	B	n	D	E	G
	Without lock	With lock						
LEKFS32□□-50□	391	421	56	180	4	—	—	130
LEKFS32□□-100□	441	471	106	230				
LEKFS32□□-150□	491	521	156	280				
LEKFS32□□-200□	541	571	206	330	6	2	300	280
LEKFS32□□-250□	591	621	256	380				
LEKFS32□□-300□	641	671	306	430				
LEKFS32□□-350□	691	721	356	480	8	3	450	430
LEKFS32□□-400□	741	771	406	530				
LEKFS32□□-450□	791	821	456	580				
LEKFS32□□-500□	841	871	506	630	10	4	600	580
LEKFS32□□-600□	941	971	606	730				
LEKFS32□□-700□	1041	1071	706	830	12	5	750	730
LEKFS32□□-800□	1141	1171	806	930	14	6	900	880
LEKFS32□□-900□	1241	1271	906	1030				
LEKFS32□□-1000□	1341	1371	1006	1130	16	7	1050	1030

Dimensions: In-line Motor

LEKFS40

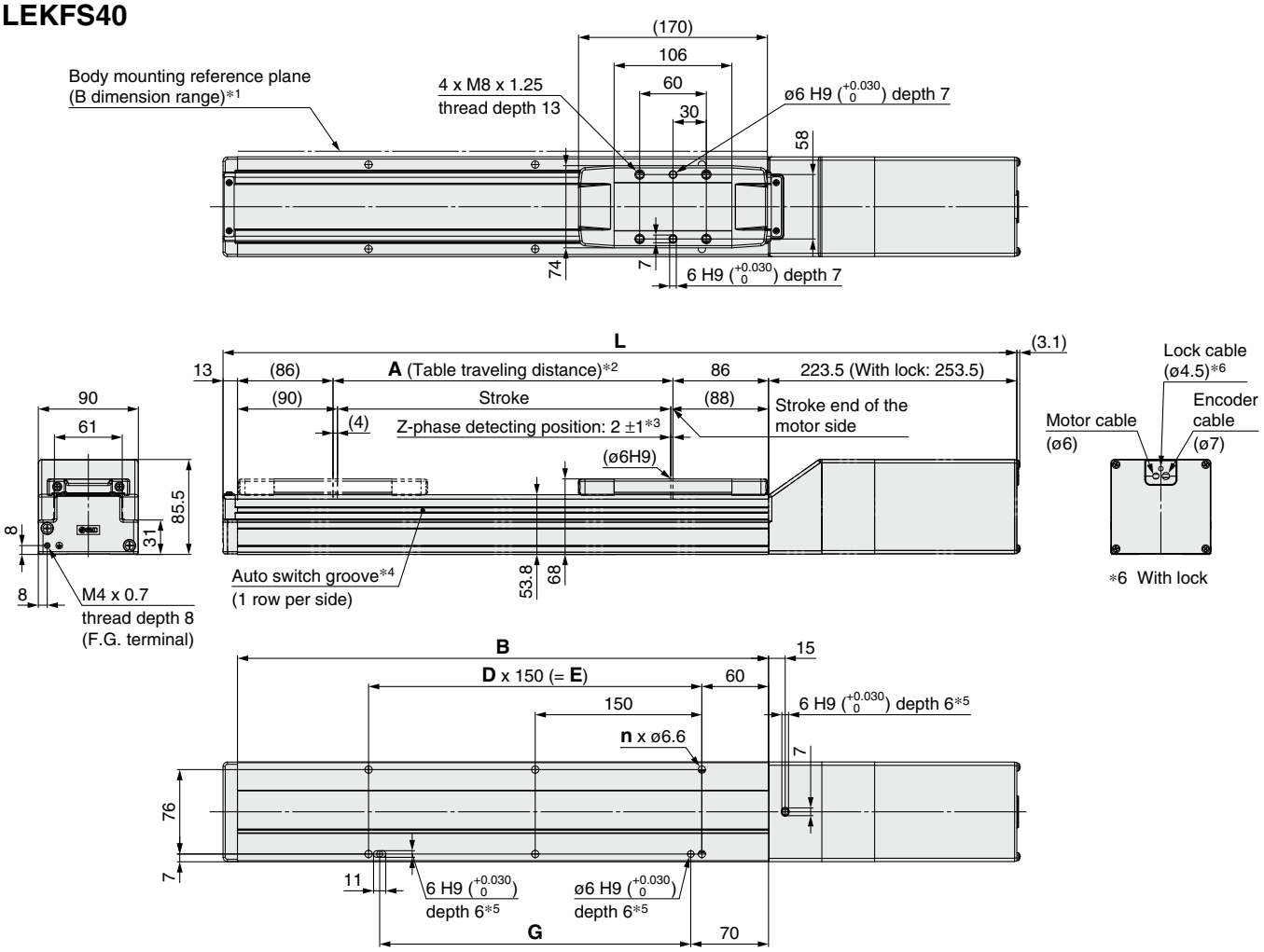

*1 When mounting the actuator using the body mounting reference plane, set the height of the opposite surface or pin to be 3 mm or more. (Recommended height: 5 mm)
In addition, be aware that surfaces other than the body mounting reference plane (B dimension range) may slightly protrude from the body mounting reference plane.
Be sure to provide a clearance of 1 mm or more to avoid interference with workpieces, facilities, etc.
*2 This is the distance within which the table can move when it returns to origin. Make sure that workpieces mounted on the table do not interfere with other workpieces or the facilities around the table.
*3 The Z-phase first detecting position from the stroke end of the motor side
*4 A switch spacer (BMY3-016) is required to secure auto switches. Please order it separately.
*5 When using the body bottom positioning pin holes, do not simultaneously use the housing B bottom pin hole.

Dimensions [mm]

Model	L		A	B	n	D	E	G
	Without lock	With lock						
LEKFS40□□-150□	564.5	594.5	156	328	4	—	150	130
LEKFS40□□-200□	614.5	644.5	206	378	6	2	300	280
LEKFS40□□-250□	664.5	694.5	256	428				
LEKFS40□□-300□	714.5	744.5	306	478				
LEKFS40□□-350□	764.5	794.5	356	528	8	3	450	430
LEKFS40□□-400□	814.5	844.5	406	578				
LEKFS40□□-450□	864.5	894.5	456	628				
LEKFS40□□-500□	914.5	944.5	506	678	10	4	600	580
LEKFS40□□-600□	1014.5	1044.5	606	778				
LEKFS40□□-700□	1114.5	1144.5	706	878	12	5	750	730
LEKFS40□□-800□	1214.5	1244.5	806	978	14	6	900	880
LEKFS40□□-900□	1314.5	1344.5	906	1078				
LEKFS40□□-1000□	1414.5	1444.5	1006	1178	16	7	1050	1030
LEKFS40□□-1100□	1514.5	1544.5	1106	1278	18	8	1200	1180
LEKFS40□□-1200□	1614.5	1644.5	1206	1378				

Dimensions: Right/Left Side Parallel Motor

LEKFS25R

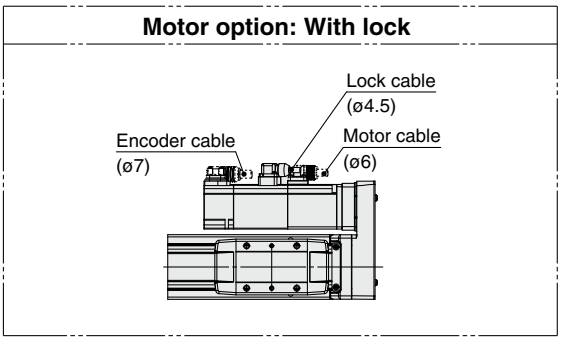

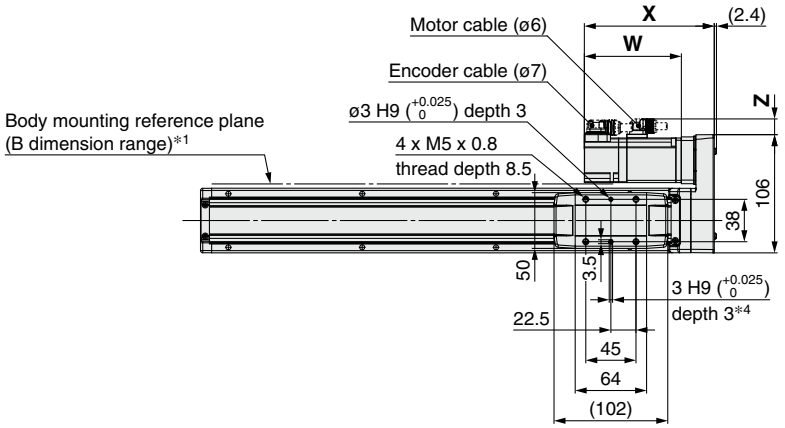

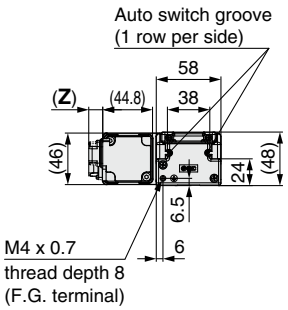

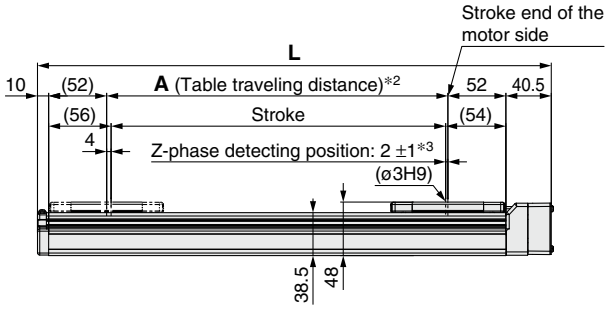

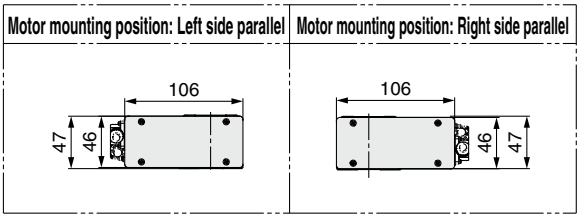

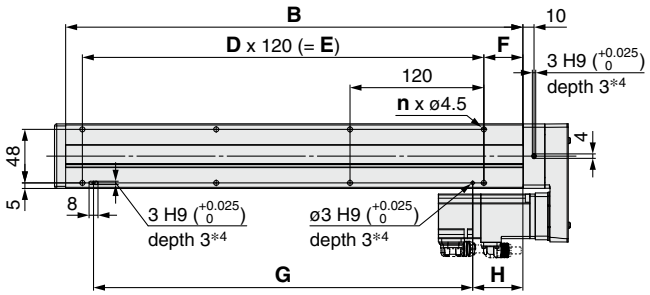

*1 When mounting the actuator using the body mounting reference plane, set the height of the opposite surface or pin to be 3 mm or more. (Recommended height: 5 mm)
In addition, be aware that surfaces other than the body mounting reference plane (B dimension range) may slightly protrude from the body mounting reference plane.
Be sure to provide a clearance of 1 mm or more to avoid interference with workpieces, facilities, etc.

*2 This is the distance within which the table can move when it returns to origin. Make sure that workpieces mounted on the table do not interfere with other workpieces or the facilities around the table.

*3 The Z-phase first detecting position from the stroke end of the motor side

*4 When using the body bottom positioning pin holes, do not simultaneously use the housing B bottom pin hole.

Motor Dimensions

[mm]

Motor type	X		W		Z	
	Without lock	With lock	Without lock	With lock	Without lock	With lock
S2	116.5	153.4	87	123.9	14.1	15.8
T6	111.9	152.5	82.4	123	14.1	15.8

Dimensions

[mm]

Model	L	A	B	n	D	E	F	G	H
LEKFS25□□□-50□	210.5	56	160	4	—	—	20	100	30
LEKFS25□□□-100□	260.5	106	210				35		45
LEKFS25□□□-150□	310.5	156	260						
LEKFS25□□□-200□	360.5	206	310	6	2	240		220	
LEKFS25□□□-250□	410.5	256	360						
LEKFS25□□□-300□	460.5	306	410	8	3	360		340	
LEKFS25□□□-350□	510.5	356	460						
LEKFS25□□□-400□	560.5	406	510						
LEKFS25□□□-450□	610.5	456	560	10	4	480		460	
LEKFS25□□□-500□	660.5	506	610						
LEKFS25□□□-600□	760.5	606	710	12	5	600		580	
LEKFS25□□□-700□	860.5	706	810	14	6	720		700	
LEKFS25□□□-800□	960.5	806	910	16	7	840		820	

Dimensions: Right/Left Side Parallel Motor

LEKFS32R

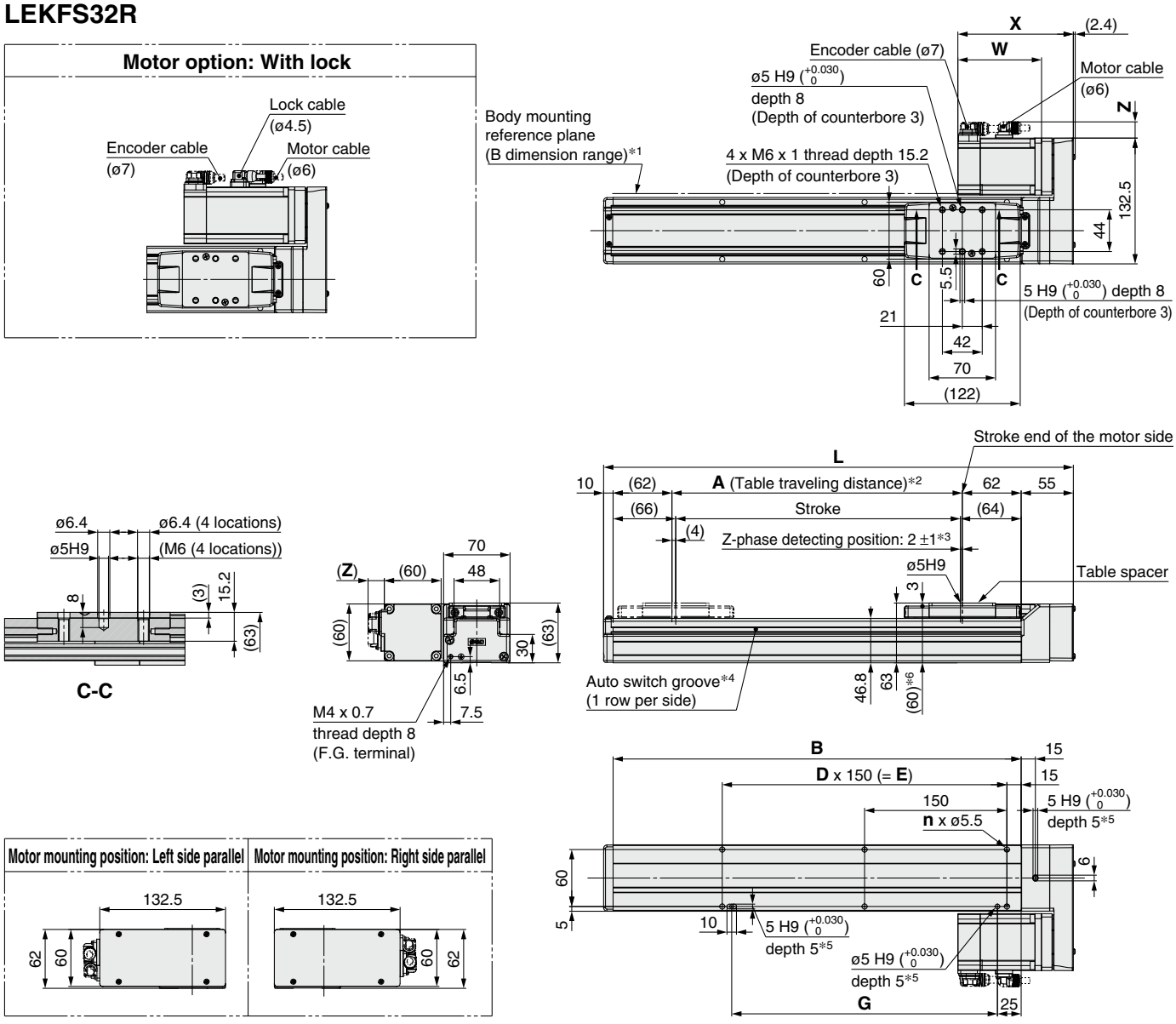

*1 When mounting the actuator using the body mounting reference plane, set the height of the opposite surface or pin to be 3 mm or more. (Recommended height: 5 mm)
In addition, be aware that surfaces other than the body mounting reference plane (B dimension range) may slightly protrude from the body mounting reference plane.
Be sure to provide a clearance of 1 mm or more to avoid interference with workpieces, facilities, etc.

*2 This is the distance within which the table can move when it returns to origin. Make sure that workpieces mounted on the table do not interfere with other workpieces or the facilities around the table.

*3 The Z-phase first detecting position from the stroke end of the motor side

*4 A switch spacer (BMY3-016) is required to secure auto switches. Please order it separately.

*5 When using the body bottom positioning pin holes, do not simultaneously use the housing B bottom pin hole.

*6 When the table spacer is removed

Motor Dimensions [mm]

Motor type	X		W		Z	
	Without lock	With lock	Without lock	With lock	Without lock	With lock
S3	121.7	150.3	88.2	116.8	17.1	17.1
T7	110.1	146.9	76.6	113.4	17.1	17.1

Dimensions [mm]

Model	L	A	B	n	D	E	G
LEKFS32□□□-50□	245	56	180	4	—	—	130
LEKFS32□□□-100□	295	106	230				
LEKFS32□□□-150□	345	156	280				
LEKFS32□□□-200□	395	206	330	6	2	300	280
LEKFS32□□□-250□	445	256	380				
LEKFS32□□□-300□	495	306	430				
LEKFS32□□□-350□	545	356	480	8	3	450	430
LEKFS32□□□-400□	595	406	530				
LEKFS32□□□-450□	645	456	580				
LEKFS32□□□-500□	695	506	630	10	4	600	580
LEKFS32□□□-600□	795	606	730				
LEKFS32□□□-700□	895	706	830	12	5	750	730
LEKFS32□□□-800□	995	806	930	14	6	900	880
LEKFS32□□□-900□	1095	906	1030				
LEKFS32□□□-1000□	1195	1006	1130	16	7	1050	1030

Dimensions: Right/Left Side Parallel Motor

LEKFS40R

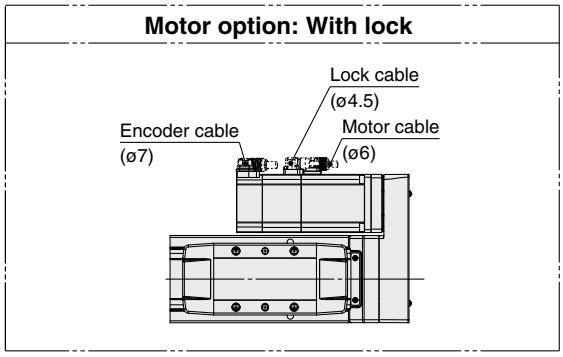

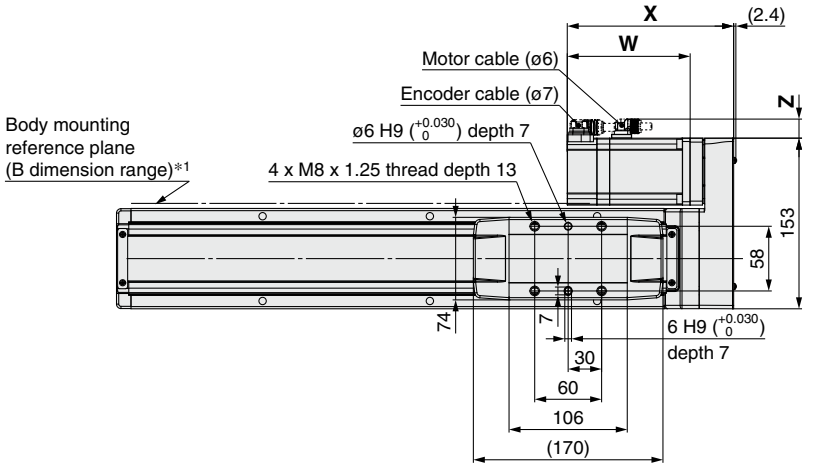

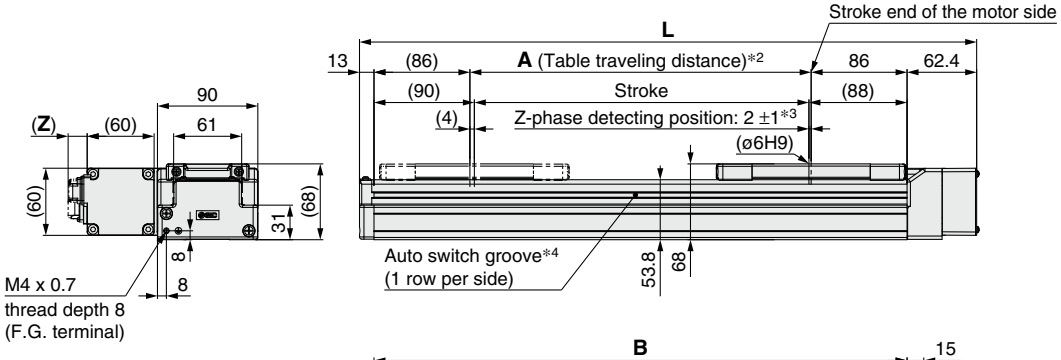

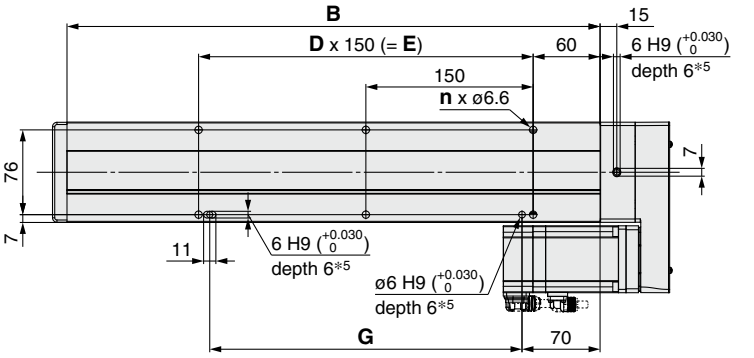

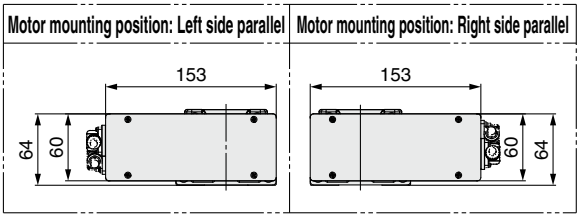

Dimensions

[mm]

Model	L	A	B	n	D	E	G
LEKFS40□□□-150□	403.4	156	328	4	—	150	130
LEKFS40□□□-200□	453.4	206	378	6	2	300	280
LEKFS40□□□-250□	503.4	256	428				
LEKFS40□□□-300□	553.4	306	478				
LEKFS40□□□-350□	603.4	356	528	8	3	450	430
LEKFS40□□□-400□	653.4	406	578				
LEKFS40□□□-450□	703.4	456	628				
LEKFS40□□□-500□	753.4	506	678	10	4	600	580
LEKFS40□□□-600□	853.4	606	778				
LEKFS40□□□-700□	953.4	706	878	12	5	750	730
LEKFS40□□□-800□	1053.4	806	978	14	6	900	880
LEKFS40□□□-900□	1153.4	906	1078				
LEKFS40□□□-1000□	1253.4	1006	1178	16	7	1050	1030
LEKFS40□□□-1100□	1353.4	1106	1278	18	8	1200	1180
LEKFS40□□□-1200□	1453.4	1206	1378				

*1 When mounting the actuator using the body mounting reference plane, set the height of the opposite surface or pin to be 3 mm or more. (Recommended height: 5 mm)
In addition, be aware that surfaces other than the body mounting reference plane (B dimension range) may slightly protrude from the body mounting reference plane.
Be sure to provide a clearance of 1 mm or more to avoid interference with workpieces, facilities, etc.

*2 This is the distance within which the table can move when it returns to origin. Make sure that workpieces mounted on the table do not interfere with other workpieces or the facilities around the table.

*3 The Z-phase first detecting position from the stroke end of the motor side

*4 A switch spacer (BMY3-016) is required to secure auto switches. Please order it separately.

*5 When using the body bottom positioning pin holes, do not simultaneously use the housing B bottom pin hole.

Motor Dimensions

[mm]

Motor type	X		W		Z	
	Without lock	With lock	Without lock	With lock	Without lock	With lock
S4	149.2	177.8	110.2	138.8	17.1	17.1
T8	137.3	174.1	98.3	135.1	17.1	17.1

High Rigidity and High Precision Slider Type
Ball Screw Drive
LEKFS Series LEKFS25, 32, 40

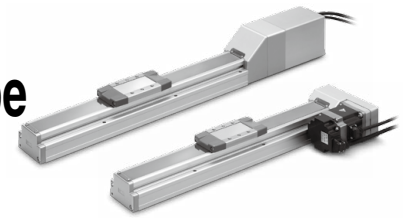

For details, refer to page 128.

LECS□ Series ▶ p. 50

How to Order

LEKFS **32** **R** **V7** **B** – **200** **B** **N** – **S** **3** **M2** **□**

❶ ❷ ❸ ❹ ❺ ❻ ❼ ❽ ❾ ❿ ⓫

❶ Size

25
32
40

❷ Motor mounting position

Nil	In-line
R	Right side parallel
L	Left side parallel

❸ Motor type

Symbol	Type	Output [W]	❶ Size	⓾ Driver type	Compatible drivers
V6*1	AC servo motor (Absolute encoder)	100	25	M2	LECYM2-V5
				U2	LECYU2-V5
V7		200	32	M2	LECYM2-V7
				U2	LECYU2-V7
V8		400	40	M2	LECYM2-V8
				U2	LECYU2-V8

*1 For motor type V6, the compatible driver part number suffix is V5.

❹ Lead [mm]

Symbol	LEKFS25	LEKFS32	LEKFS40
H	20	24	30
A	12	16	20
B	6	8	10

❺ Stroke [mm]

50	50
to	to
1200	1200

❻ Motor option

Nil	Without option
B	With lock

❼ Grease application (Seal band part)

Nil	With
N	Without (Roller specification)

❽ Cable type

Nil	Without cable
S	Standard cable
R	Robotic cable (Flexible cable)

❾ Actuator cable length [m]

Nil	Without cable
3	3
5	5
A	10
C	20

❿ Driver type

	Compatible drivers	Power supply voltage [V]
Nil	Without driver	—
M2	LECYM2-V□	200 to 230
U2	LECYU2-V□	200 to 230

* When a driver type is selected, a cable is included. Select the cable type and cable length.

⓫ I/O cable length [m]*1

Nil	Without cable
H	Without cable (Connector only)
1	1.5

*1 When "Nil: Without driver" is selected for the driver type, only "Nil: Without cable" can be selected. Refer to page 123 if an I/O cable is required. (Options are shown on page 123.)

Applicable Stroke Table

●: Standard

Size	Stroke																
	50	100	150	200	250	300	350	400	450	500	600	700	800	900	1000	1100	1200
25	●	●	●	●	●	●	●	●	●	●	●	●	●	—	—	—	—
32	●	●	●	●	●	●	●	●	●	●	●	●	●	●	●	—	—
40	—	—	●	●	●	●	●	●	●	●	●	●	●	●	●	●	●

* Please contact SMC for non-standard strokes as they are produced as special orders.

For auto switches, refer to pages 70 to 73.

Compatible Drivers

Driver type	MECHATROLINK-Ⅱ type	MECHATROLINK-Ⅲ type
Series	LECYM	LECYU
Applicable network	MECHATROLINK-Ⅱ	MECHATROLINK-Ⅲ
Control encoder	Absolute 20-bit encoder	
Communication device	USB communication, RS-422 communication	
Power supply voltage [V]	200 to 230 VAC (50/60 Hz)	
Reference page	116	

Specifications

AC Servo Motor

Model			LEKFS25□V6			LEKFS32□V7			LEKFS40□V8		
Actuator specifications	Stroke [mm]		50 to 800			50 to 1000			150 to 1200		
	Work load [kg]*1	Horizontal	10	20	20	30	40	45	30	50	60
		Vertical	4	8	15	5	10	20	7	15	30
	Speed*2 [mm/s] Stroke range	Up to 400	1500	900	450	1500	1000	500	1500	1000	500
		401 to 500	1200	720	360	1500	1000	500	1500	1000	500
		501 to 600	900	540	270	1200	1000	500	1500	1000	500
		601 to 700	700	420	210	930	620	310	1410	940	470
		701 to 800	550	330	160	750	500	250	1140	760	380
		801 to 900	—	—	—	610	410	200	930	620	310
		901 to 1000	—	—	—	510	340	170	780	520	260
		1001 to 1100	—	—	—	—	—	—	500	440	220
		1101 to 1200	—	—	—	—	—	—	500	380	190
	Max. acceleration/deceleration [mm/s²]		20000 (Refer to the **Web Catalog** for limit according to work load and duty ratio.)								
	Positioning repeatability [mm]		±0.01								
	Lost motion [mm]*3		0.05								
	Lead [mm]		20	12	6	24	16	8	30	20	10
	Impact/Vibration resistance [m/s²]*4		50/20								
	Actuation type		Ball screw (LEKFS□), Ball screw + Belt (LEKFS□R/L)								
	Guide type		Linear guide								
	Operating temperature range [°C]		5 to 40								
	Operating humidity range [%RH]		90 or less (No condensation)								
	Enclosure		IP30								
Electric specifications	Motor output/Size		100 W/□40			200 W/□60			400 W/□60		
	Motor type		AC servo motor (200 VAC)								
	Encoder		Absolute 20-bit encoder (Resolution: 1048576 p/rev)								
	Power [W]*5		Max. power 445			Max. power 725			Max. power 1275		
Lock unit specifications	Type*6		Non-magnetizing lock								
	Holding force [N]		78	131	255	131	197	385	220	330	660
	Power consumption at 20°C [W]		5.5			6			6		
	Power supply voltage [V]		24 VDC (0/–10%)								

*1 For details, refer to the “Speed–Work Load Graph (Guide)” on page 36.
*2 The allowable speed changes according to the stroke.
*3 A reference value for correcting errors in reciprocal operation
*4 Impact resistance: No malfunction occurred when the actuator was tested with a drop tester in both an axial direction and a perpendicular direction to the lead screw. (The test was performed with the actuator in the initial state.)
Vibration resistance: No malfunction occurred in a test ranging between 45 to 2000 Hz. The test was performed in both an axial direction and a perpendicular direction to the lead screw. (The test was performed with the actuator in the initial state.)
*5 Indicates the max. power during operation (including the driver). When selecting the power supply capacity, refer to the power supply capacity in the operation manual of each driver.
*6 Only when motor option “With lock” is selected

Weight

Series	LEKFS25□V6												
Stroke [mm]	50	100	150	200	250	300	350	400	450	500	600	700	800
Motor type	2.1	2.2	2.4	2.5	2.7	2.8	2.9	3.0	3.2	3.3	3.6	3.9	4.2
Additional weight with lock [kg]	0.3												

Series	LEKFS32□V7														
Stroke [mm]	50	100	150	200	250	300	350	400	450	500	600	700	800	900	1000
Motor type	3.4	3.6	3.8	4.0	4.3	4.5	4.7	4.9	5.1	5.3	5.8	6.2	6.6	7.1	7.5
Additional weight with lock [kg]	0.7														

Series	LEKFS40□V8														
Stroke [mm]	150	200	250	300	350	400	450	500	600	700	800	900	1000	1100	1200
Motor type	6.0	6.3	6.6	6.9	7.2	7.5	7.8	8.1	8.7	9.3	9.9	10.5	11.1	11.7	12.3
Additional weight with lock [kg]	0.7														

Construction: In-line Motor

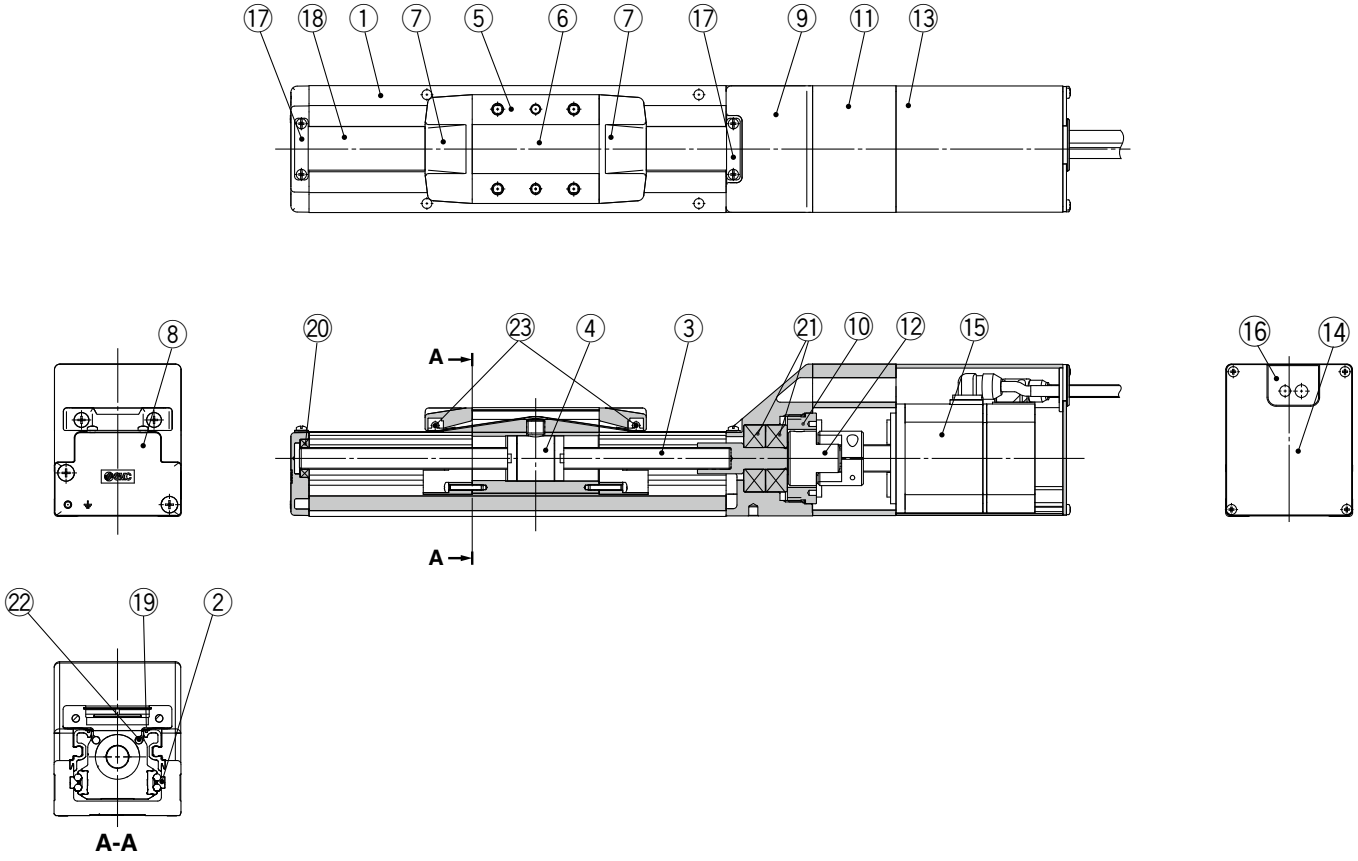

Component Parts

No.	Description	Material	Note
1	**Body**	Aluminum alloy	Anodized
2	**Rail guide**	—	
3	**Ball screw shaft**	—	
4	**Ball screw nut**	—	
5	**Table**	Aluminum alloy	Anodized
6	**Blanking plate**	Aluminum alloy	Anodized
7	**Seal band holder**	Synthetic resin	
8	**Housing A**	Aluminum die-casted	Coating
9	**Housing B**	Aluminum die-casted	Coating
10	**Bearing stopper**	Aluminum alloy	
11	**Motor mount**	Aluminum alloy	Coating
12	**Coupling**	—	
13	**Motor cover**	Aluminum alloy	Anodized
14	**End cover**	Aluminum alloy	Anodized
15	**Motor**	—	

No.	Description	Material	Note
16	**Rubber bushing**	NBR	
17	**Band stopper**	Stainless steel	
18	**Dust seal band**	Stainless steel	
19	**Seal magnet**	—	
20	**Bearing**	—	Stroke 300 mm or more
21	**Bearing**	—	
22	**Magnet**	—	
23	**Roller assembly**	—	Without grease application

Replacement Parts/Grease Pack

Applied portion	Order no.
Ball screw	GR-S-010 (10 g) GR-S-020 (20 g)
Rail guide	
Dust seal band (When "Without" is selected for the grease application, grease is applied only on the back side.)	

Construction: Right/Left Side Parallel Motor

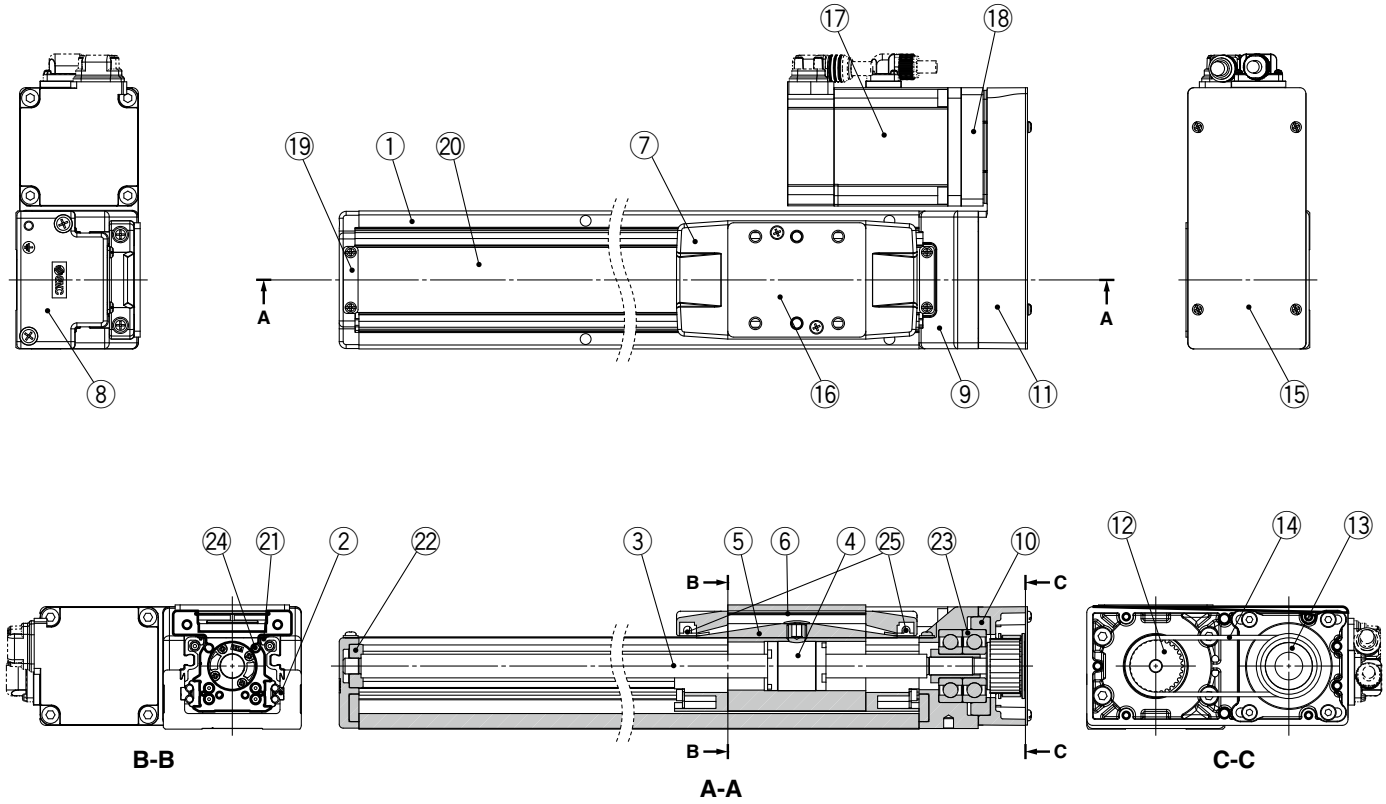

Component Parts

No.	Description		Material	Note
1	**Body**		Aluminum alloy	Anodized
2	**Rail guide**		—	
3	**Ball screw shaft**		—	
4	**Ball screw nut**		—	
5	**Table**		Aluminum alloy	Anodized
6	**Blanking plate**		Aluminum alloy	Anodized
7	**Seal band holder**		Synthetic resin	
8	**Housing A**		Aluminum die-casted	Coating
9	**Housing B**		Aluminum die-casted	Coating
10	**Bearing stopper**		Aluminum alloy	
11	**Return plate**		Aluminum alloy	Coating
12	**Pulley**		Aluminum alloy	
13	**Pulley**		Aluminum alloy	
15	**Cover plate**		Aluminum alloy	Anodized
16	**Table spacer**	**LEKFS32**	Aluminum alloy	Anodized
17	**Motor**		—	
18	**Motor adapter**		Aluminum alloy	Coating
19	**Band stopper**		Stainless steel	
20	**Dust seal band**		Stainless steel	

No.	Description	Material	Note
21	**Seal magnet**	—	
22	**Bearing**	—	Stroke 300 mm or more
23	**Bearing**	—	
24	**Magnet**	—	
25	**Roller assembly**	—	Without grease application

Replacement Parts/Belt

No.	Size	Order no.
14	25	LE-D-6-2
	32	LE-D-6-3
	40	LE-D-6-4

Replacement Parts/Grease Pack

Applied portion	Order no.
Ball screw	GR-S-010 (10 g) GR-S-020 (20 g)
Rail guide	
Dust seal band (When "Without" is selected for the grease application, grease is applied only on the back side.)	

Dimensions: In-line Motor

LEKFS25

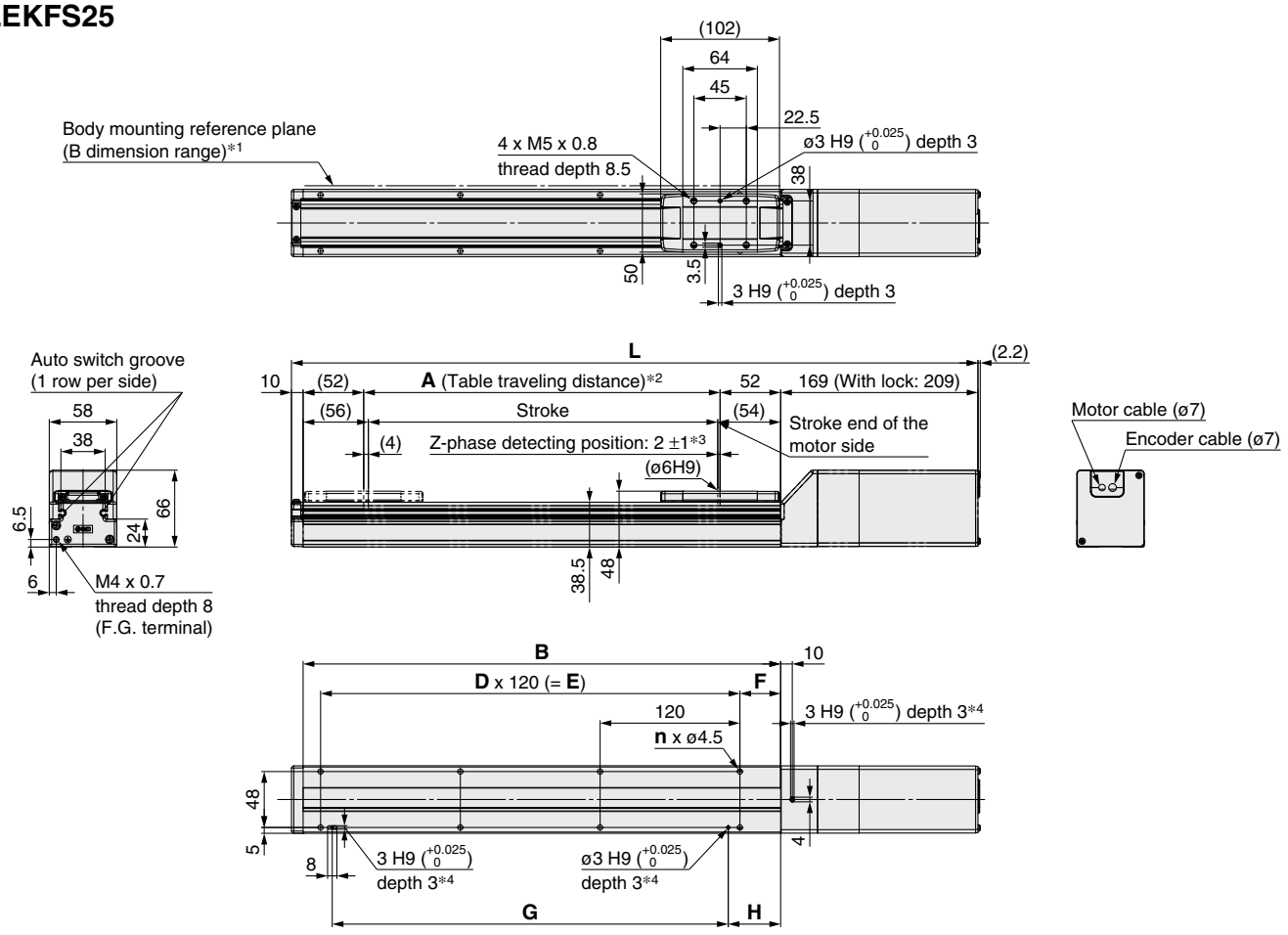

*1 When mounting the actuator using the body mounting reference plane, set the height of the opposite surface or pin to be 3 mm or more. (Recommended height: 5 mm)
In addition, be aware that surfaces other than the body mounting reference plane (B dimension range) may slightly protrude from the body mounting reference plane.
Be sure to provide a clearance of 1 mm or more to avoid interference with workpieces, facilities, etc.

*2 This is the distance within which the table can move when it returns to origin. Make sure that workpieces mounted on the table do not interfere with other workpieces or the facilities around the table.

*3 The Z-phase first detecting position from the stroke end of the motor side

*4 When using the body bottom positioning pin holes, do not simultaneously use the housing B bottom pin hole.

Dimensions

[mm]

Model	L		A	B	n	D	E	F	G	H
	Without lock	With lock								
LEKFS25□□-50□	339	379	56	160	4	—	—	20	100	30
LEKFS25□□-100□	389	429	106	210				35		45
LEKFS25□□-150□	439	479	156	260						
LEKFS25□□-200□	489	529	206	310	6	2	240		220	
LEKFS25□□-250□	539	579	256	360						
LEKFS25□□-300□	589	629	306	410	8	3	360		340	
LEKFS25□□-350□	639	679	356	460						
LEKFS25□□-400□	689	729	406	510						
LEKFS25□□-450□	739	779	456	560	10	4	480		460	
LEKFS25□□-500□	789	829	506	610						
LEKFS25□□-600□	889	929	606	710	12	5	600		580	
LEKFS25□□-700□	989	1029	706	810	14	6	720		700	
LEKFS25□□-800□	1089	1129	806	910	16	7	840		820	

Dimensions: In-line Motor

LEKFS32

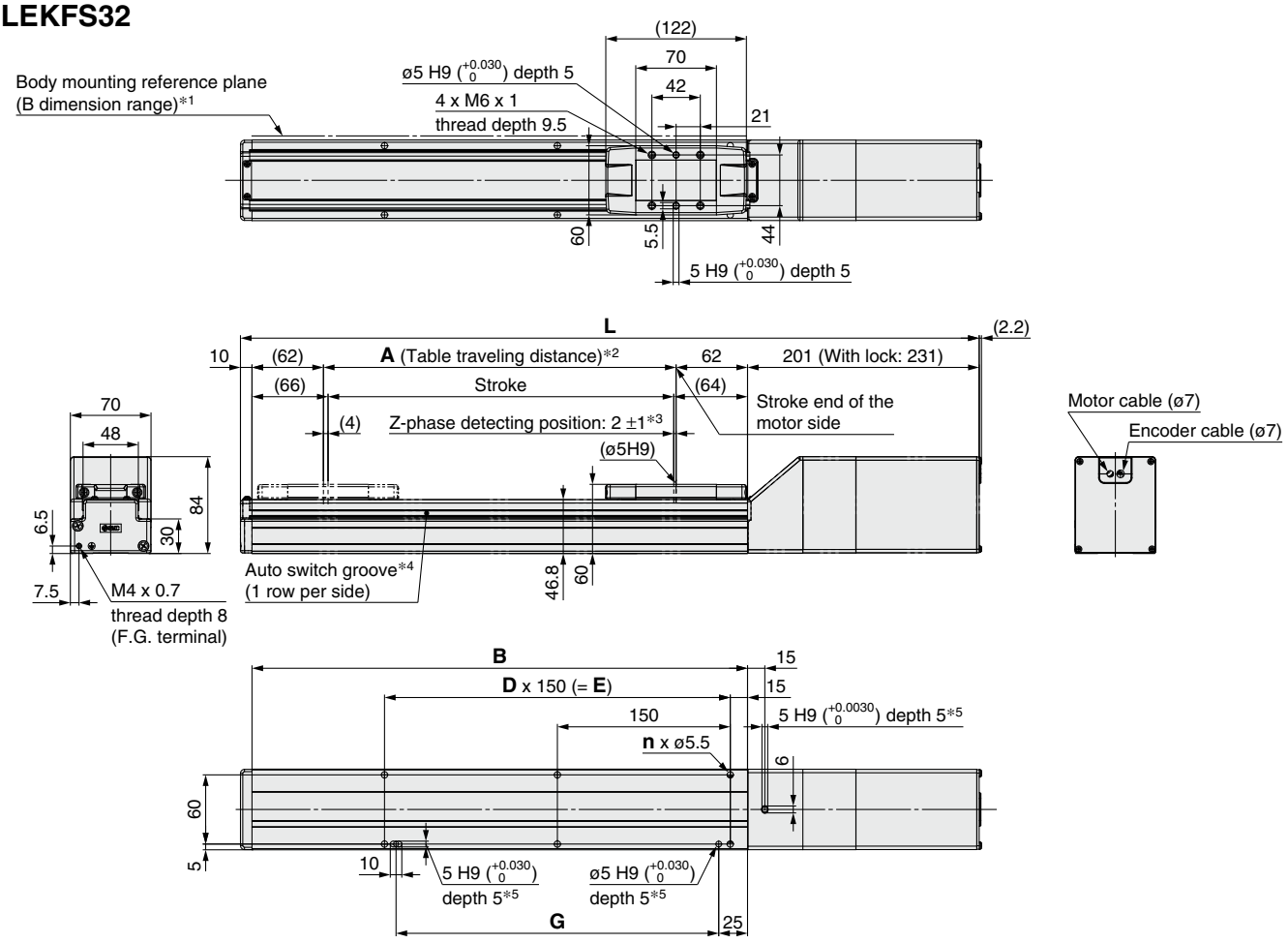

*1 When mounting the actuator using the body mounting reference plane, set the height of the opposite surface or pin to be 3 mm or more. (Recommended height: 5 mm)
In addition, be aware that surfaces other than the body mounting reference plane (B dimension range) may slightly protrude from the body mounting reference plane.
Be sure to provide a clearance of 1 mm or more to avoid interference with workpieces, facilities, etc.
*2 This is the distance within which the table can move when it returns to origin. Make sure that workpieces mounted on the table do not interfere with other workpieces or the facilities around the table.
*3 The Z-phase first detecting position from the stroke end of the motor side
*4 A switch spacer (BMY3-016) is required to secure auto switches. Please order it separately.
*5 When using the body bottom positioning pin holes, do not simultaneously use the housing B bottom pin hole.

Dimensions

[mm]

Model	L		A	B	n	D	E	G
	Without lock	With lock						
LEKFS32□□-50□	391	421	56	180	4	—	—	130
LEKFS32□□-100□	441	471	106	230				
LEKFS32□□-150□	491	521	156	280				
LEKFS32□□-200□	541	571	206	330	6	2	300	280
LEKFS32□□-250□	591	621	256	380				
LEKFS32□□-300□	641	671	306	430				
LEKFS32□□-350□	691	721	356	480	8	3	450	430
LEKFS32□□-400□	741	771	406	530				
LEKFS32□□-450□	791	821	456	580				
LEKFS32□□-500□	841	871	506	630	10	4	600	580
LEKFS32□□-600□	941	971	606	730				
LEKFS32□□-700□	1041	1071	706	830	12	5	750	730
LEKFS32□□-800□	1141	1171	806	930	14	6	900	880
LEKFS32□□-900□	1241	1271	906	1030				
LEKFS32□□-1000□	1341	1371	1006	1130	16	7	1050	1030

Dimensions: In-line Motor

LEKFS40

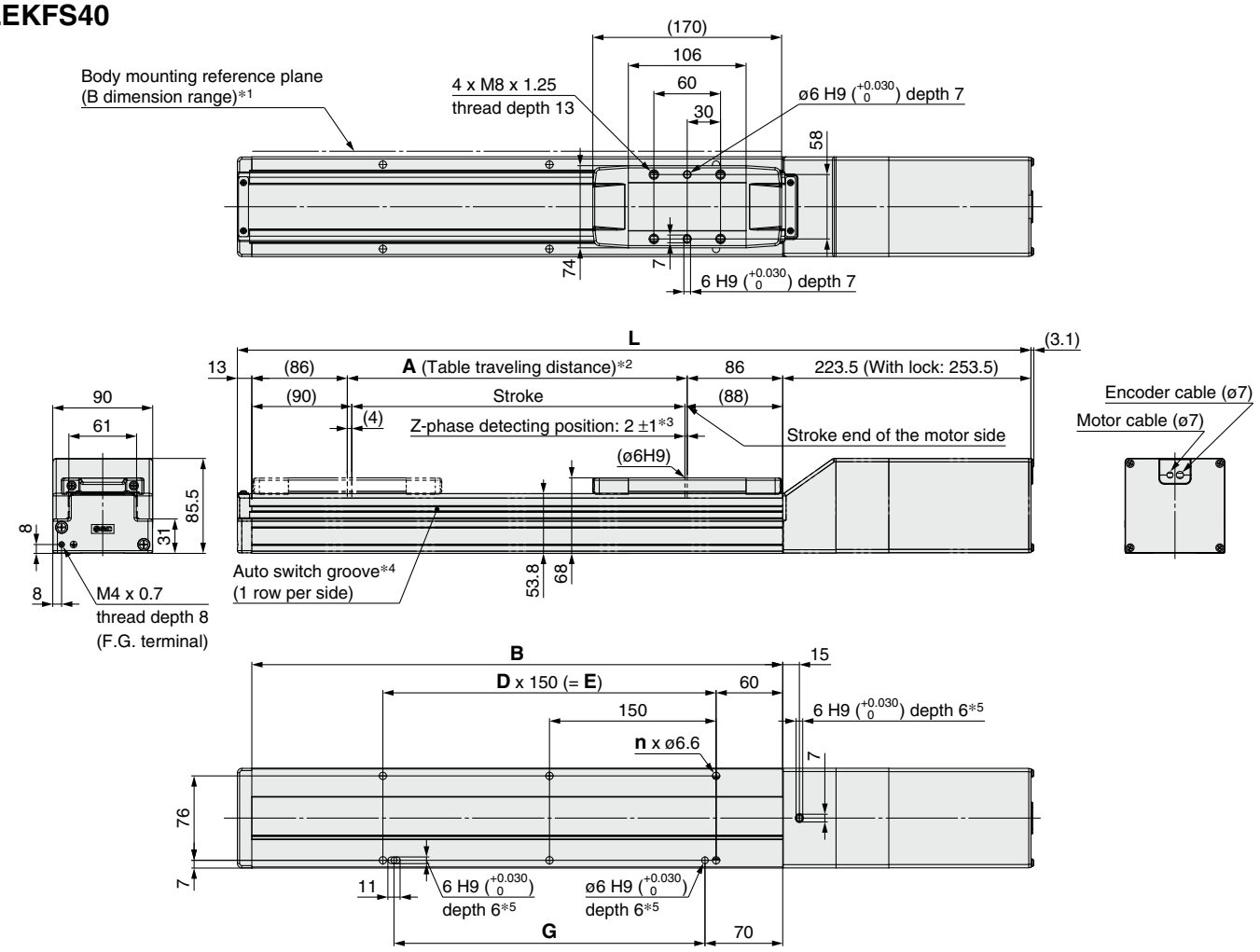

*1 When mounting the actuator using the body mounting reference plane, set the height of the opposite surface or pin to be 3 mm or more. (Recommended height: 5 mm)
In addition, be aware that surfaces other than the body mounting reference plane (B dimension range) may slightly protrude from the body mounting reference plane.
Be sure to provide a clearance of 1 mm or more to avoid interference with workpieces, facilities, etc.

*2 This is the distance within which the table can move when it returns to origin. Make sure that workpieces mounted on the table do not interfere with other workpieces or the facilities around the table.

*3 The Z-phase first detecting position from the stroke end of the motor side

*4 A switch spacer (BMY3-016) is required to secure auto switches. Please order it separately.

*5 When using the body bottom positioning pin holes, do not simultaneously use the housing B bottom pin hole.

Dimensions [mm]

Model	L		A	B	n	D	E	G
	Without lock	With lock						
LEKFS40□□-150□	564.5	594.5	156	328	4	—	150	130
LEKFS40□□-200□	614.5	644.5	206	378	6	2	300	280
LEKFS40□□-250□	664.5	694.5	256	428				
LEKFS40□□-300□	714.5	744.5	306	478				
LEKFS40□□-350□	764.5	794.5	356	528	8	3	450	430
LEKFS40□□-400□	814.5	844.5	406	578				
LEKFS40□□-450□	864.5	894.5	456	628				
LEKFS40□□-500□	914.5	944.5	506	678	10	4	600	580
LEKFS40□□-600□	1014.5	1044.5	606	778				
LEKFS40□□-700□	1114.5	1144.5	706	878	12	5	750	730
LEKFS40□□-800□	1214.5	1244.5	806	978	14	6	900	880
LEKFS40□□-900□	1314.5	1344.5	906	1078				
LEKFS40□□-1000□	1414.5	1444.5	1006	1178	16	7	1050	1030
LEKFS40□□-1100□	1514.5	1544.5	1106	1278	18	8	1200	1180
LEKFS40□□-1200□	1614.5	1644.5	1206	1378				

Dimensions: Right/Left Side Parallel Motor

LEKFS25R

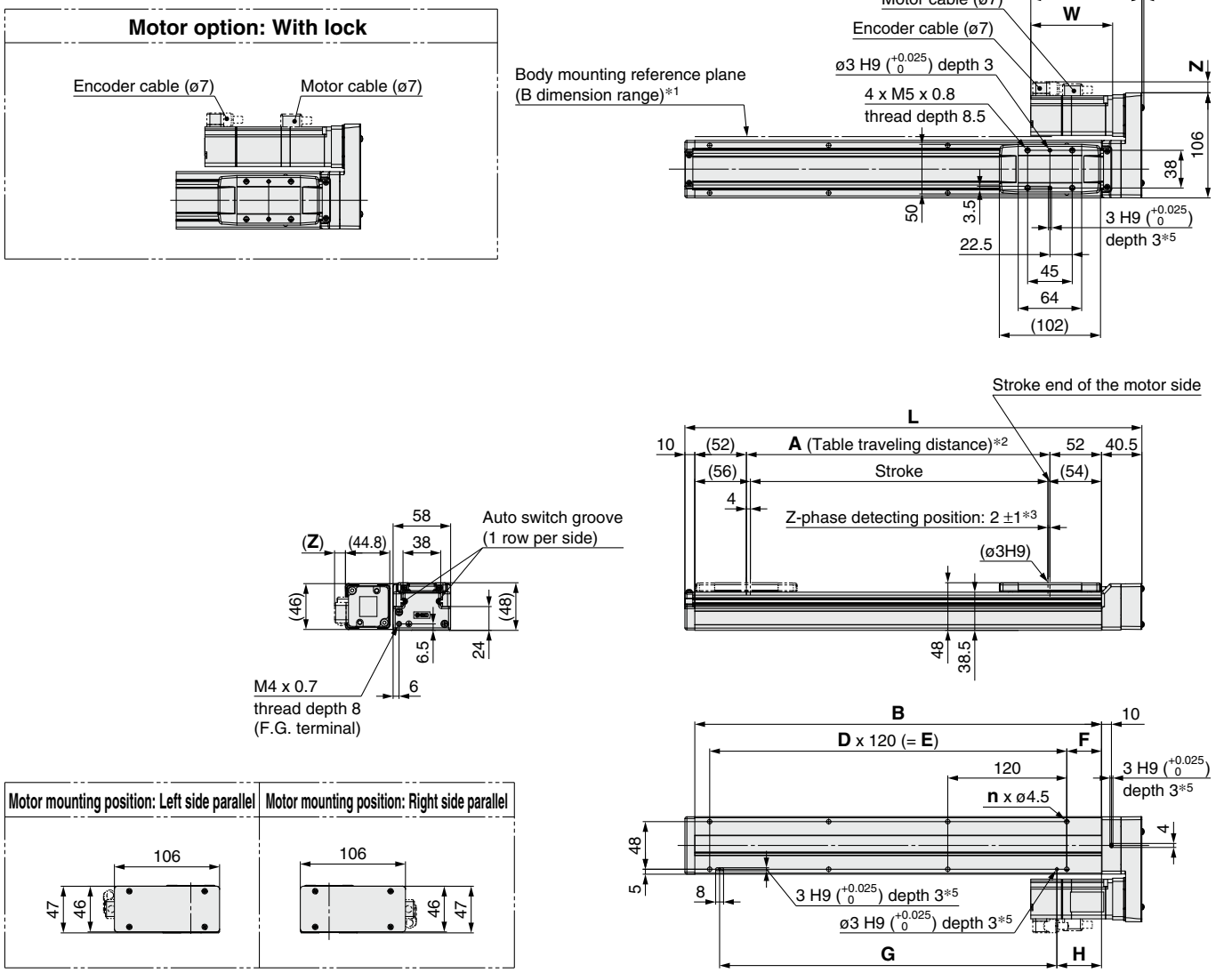

*1 When mounting the actuator using the body mounting reference plane, set the height of the opposite surface or pin to be 3 mm or more. (Recommended height: 5 mm)
In addition, be aware that surfaces other than the body mounting reference plane (B dimension range) may slightly protrude from the body mounting reference plane.
Be sure to provide a clearance of 1 mm or more to avoid interference with workpieces, facilities, etc.

*2 This is the distance within which the table can move when it returns to origin. Make sure that workpieces mounted on the table do not interfere with other workpieces or the facilities around the table.

*3 The Z-phase first detecting position from the stroke end of the motor side

*4 A switch spacer (BMY3-016) is required to secure auto switches. Please order it separately.

*5 When using the body bottom positioning pin holes, do not simultaneously use the housing B bottom pin hole.

Motor Dimensions [mm]

Motor type	X		W		Z	
	Without lock	With lock	Without lock	With lock	Without lock	With lock
V6	112	157	82.5	127.5	11	

Dimensions [mm]

Model	L	A	B	n	D	E	F	G	H
LEKFS25□□□-50□	210.5	56	160	4	—	—	20	100	30
LEKFS25□□□-100□	260.5	106	210				35		45
LEKFS25□□□-150□	310.5	156	260						
LEKFS25□□□-200□	360.5	206	310	6	2	240		220	
LEKFS25□□□-250□	410.5	256	360						
LEKFS25□□□-300□	460.5	306	410	8	3	360		340	
LEKFS25□□□-350□	510.5	356	460						
LEKFS25□□□-400□	560.5	406	510						
LEKFS25□□□-450□	610.5	456	560	10	4	480		460	
LEKFS25□□□-500□	660.5	506	610						
LEKFS25□□□-600□	760.5	606	710	12	5	600		580	
LEKFS25□□□-700□	860.5	706	810	14	6	720		700	
LEKFS25□□□-800□	960.5	806	910	16	7	840		820	

Dimensions: Right/Left Side Parallel Motor

LEKFS32R

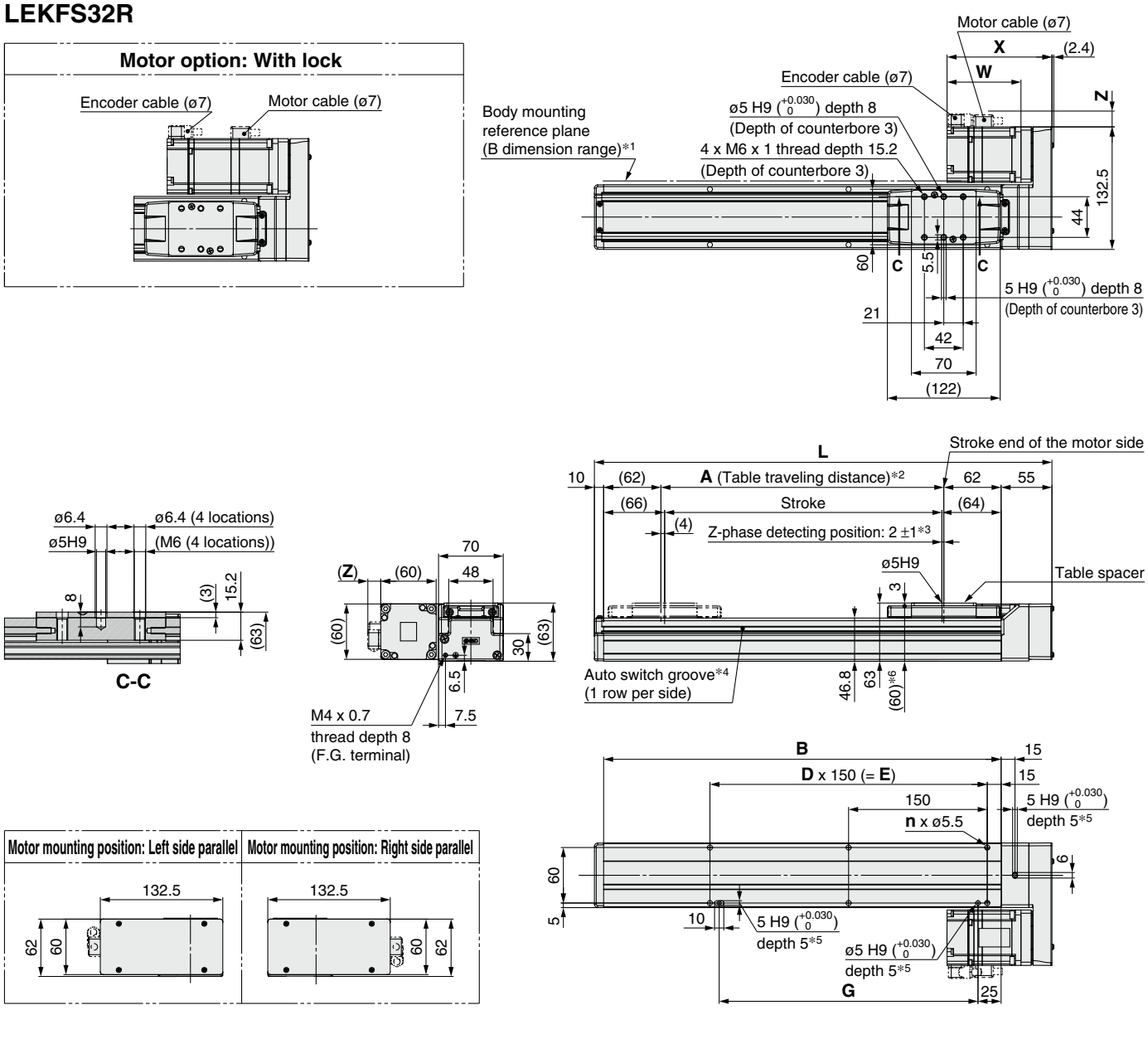

*1 When mounting the actuator using the body mounting reference plane, set the height of the opposite surface or pin to be 3 mm or more. (Recommended height: 5 mm)
In addition, be aware that surfaces other than the body mounting reference plane (B dimension range) may slightly protrude from the body mounting reference plane.
Be sure to provide a clearance of 1 mm or more to avoid interference with workpieces, facilities, etc.

*2 This is the distance within which the table can move when it returns to origin. Make sure that workpieces mounted on the table do not interfere with other workpieces or the facilities around the table.

*3 The Z-phase first detecting position from the stroke end of the motor side

*4 A switch spacer (BMY3-016) is required to secure auto switches. Please order it separately.

*5 When using the body bottom positioning pin holes, do not simultaneously use the housing B bottom pin hole.

*6 When the table spacer is removed

Motor Dimensions [mm]

Motor type	X		W		Z	
	Without lock	With lock	Without lock	With lock	Without lock	With lock
V7	113.5	153.5	80	120	14	

Dimensions [mm]

Model	L	A	B	n	D	E	G
LEKFS32□□□-50□	245	56	180	4	—	—	130
LEKFS32□□□-100□	295	106	230				
LEKFS32□□□-150□	345	156	280				
LEKFS32□□□-200□	395	206	330	6	2	300	280
LEKFS32□□□-250□	445	256	380				
LEKFS32□□□-300□	495	306	430				
LEKFS32□□□-350□	545	356	480	8	3	450	430
LEKFS32□□□-400□	595	406	530				
LEKFS32□□□-450□	645	456	580				
LEKFS32□□□-500□	695	506	630	10	4	600	580
LEKFS32□□□-600□	795	606	730				
LEKFS32□□□-700□	895	706	830	12	5	750	730
LEKFS32□□□-800□	995	806	930	14	6	900	880
LEKFS32□□□-900□	1095	906	1030				
LEKFS32□□□-1000□	1195	1006	1130	16	7	1050	1030

Dimensions: Right/Left Side Parallel Motor

LEKFS40R

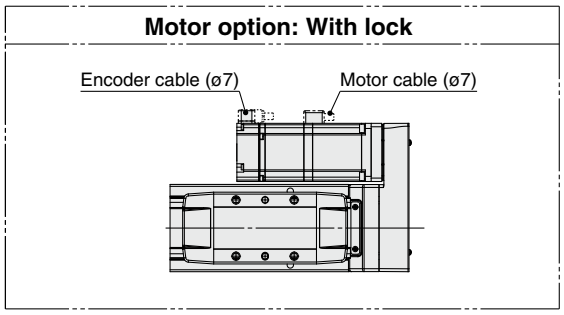

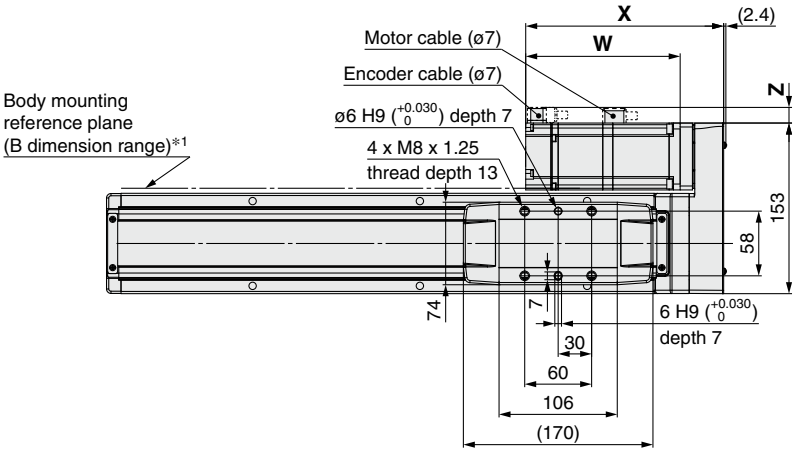

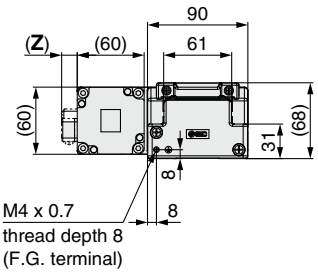

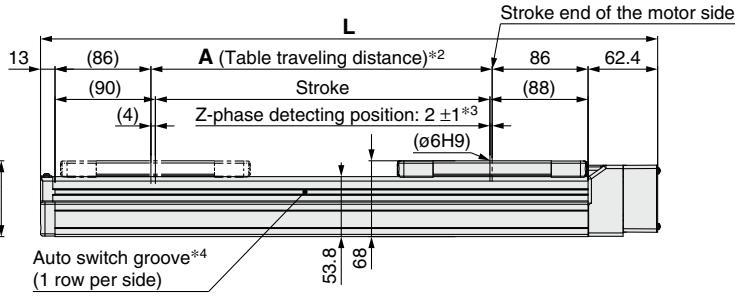

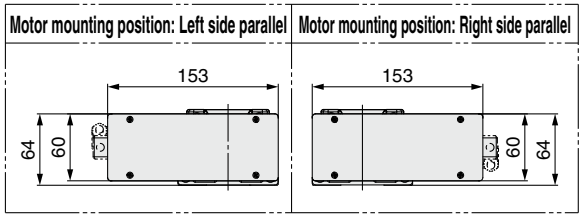

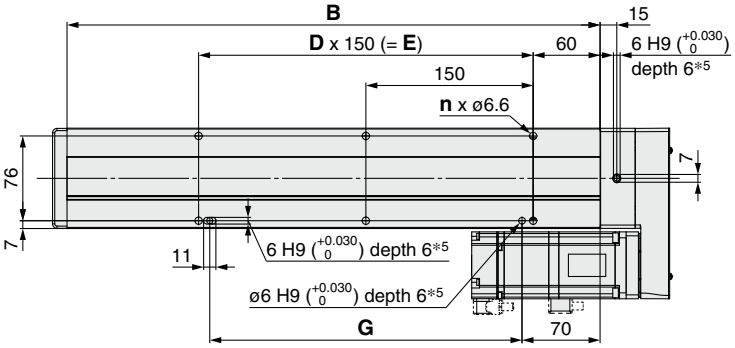

Dimensions

[mm]

Model	L	A	B	n	D	E	G
LEKFS40□□□-150□	403.4	156	328	4	—	150	130
LEKFS40□□□-200□	453.4	206	378	6	2	300	280
LEKFS40□□□-250□	503.4	256	428				
LEKFS40□□□-300□	553.4	306	478				
LEKFS40□□□-350□	603.4	356	528	8	3	450	430
LEKFS40□□□-400□	653.4	406	578				
LEKFS40□□□-450□	703.4	456	628				
LEKFS40□□□-500□	753.4	506	678	10	4	600	580
LEKFS40□□□-600□	853.4	606	778				
LEKFS40□□□-700□	953.4	706	878	12	5	750	730
LEKFS40□□□-800□	1053.4	806	978	14	6	900	880
LEKFS40□□□-900□	1153.4	906	1078				
LEKFS40□□□-1000□	1253.4	1006	1178	16	7	1050	1030
LEKFS40□□□-1100□	1353.4	1106	1278	18	8	1200	1180
LEKFS40□□□-1200□	1453.4	1206	1378				

*1 When mounting the actuator using the body mounting reference plane, set the height of the opposite surface or pin to be 3 mm or more. (Recommended height: 5 mm)
In addition, be aware that surfaces other than the body mounting reference plane (B dimension range) may slightly protrude from the body mounting reference plane.
Be sure to provide a clearance of 1 mm or more to avoid interference with workpieces, facilities, etc.

*2 This is the distance within which the table can move when it returns to origin. Make sure that workpieces mounted on the table do not interfere with other workpieces or the facilities around the table.

*3 The Z-phase first detecting position from the stroke end of the motor side

*4 A switch spacer (BMY3-016) is required to secure auto switches. Please order it separately.

*5 When using the body bottom positioning pin holes, do not simultaneously use the housing B bottom pin hole.

Motor Dimensions

[mm]

Motor type	X		W		Z	
	Without lock	With lock	Without lock	With lock	Without lock	With lock
V8	137.5	177.5	98.5	138.5	14	

LEKFS Series
Auto Switch Mounting

Auto Switch Mounting Position

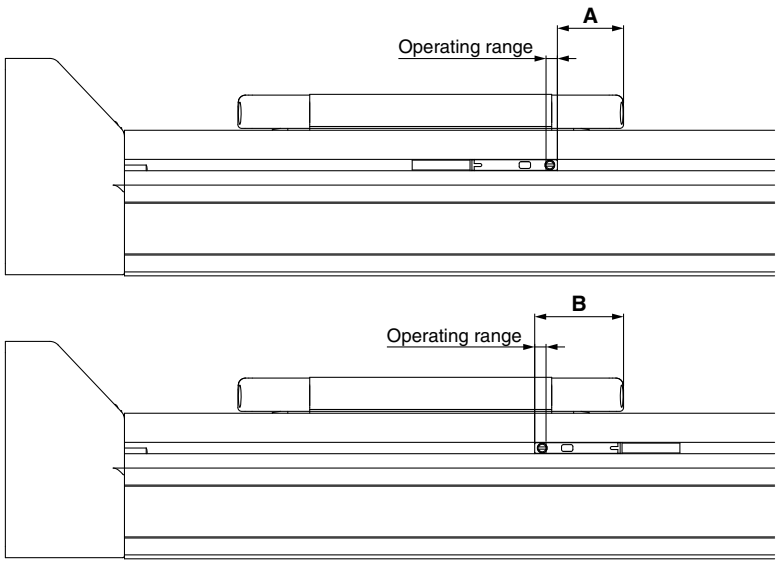

Table 1 Auto switch mounting dimensions [mm]

Model	Size	A	B	Operating range
LEKFS	16	12.5	24.5	3.0
	25	17.5	29.5	3.0
	32	26.3	39.1	3.4
	40	32.2	45.4	3.6

* The applicable auto switch is D-M9 (N/P/B) (W) (M/L/Z).
* The operating range is a guideline including hysteresis, not meant to be guaranteed. There may be large variations depending on the ambient environment.
* Adjust the auto switch after confirming the operating conditions in the actual setting.

Auto Switch Mounting

LEKFS16/25

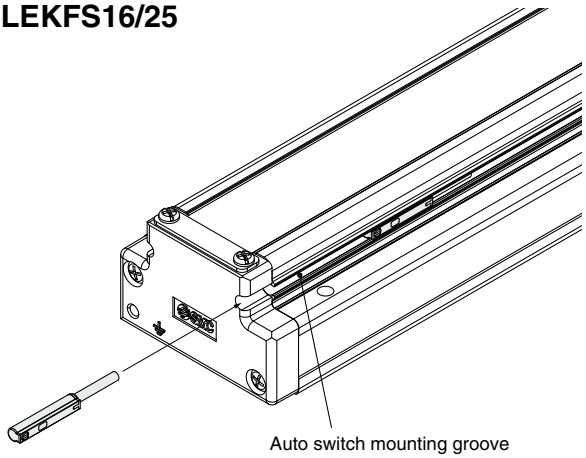

Auto Switch Mounting Screw

Tightening torque [N·m]
0.1 to 0.15

LEKFS32/40

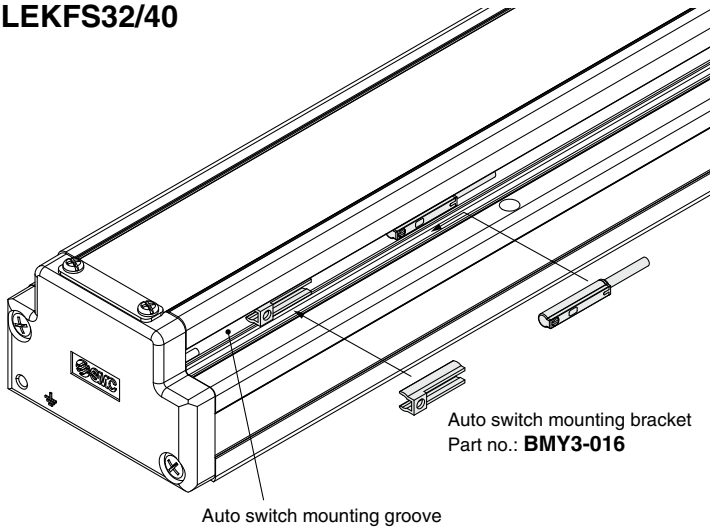

* The applicable auto switch is D-M9 (N/P/B) (W) (M/L/Z).
* When tightening the auto switch mounting screw (included with the auto switch), use a watchmaker's screwdriver with a handle diameter of 5 to 6 mm.
* Prepare an auto switch mounting bracket (BMY3-016) when mounting the auto switch on to the LEKFS32/40.

Solid State Auto Switch
Direct Mounting Type
D-M9N/D-M9P/D-M9B

Refer to the SMC website for details on products that are compliant with international standards.

Grommet

- **2-wire load current is reduced (2.5 to 40 mA).**
- **Using flexible cable as standard spec.**

⚠Caution

Precautions

Fix the auto switch with the existing screw installed on the auto switch body. The auto switch may be damaged if a screw other than the one supplied is used.

Auto Switch Specifications

PLC: Programmable Logic Controller

D-M9□, D-M9□V (With indicator light)			
Auto switch model	**D-M9N**	**D-M9P**	**D-M9B**
Electrical entry direction	In-line		
Wiring type	3-wire		2-wire
Output type	NPN	PNP	—
Applicable load	IC circuit, Relay, PLC		24 VDC relay, PLC
Power supply voltage	5, 12, 24 VDC (4.5 to 28 V)		—
Current consumption	10 mA or less		—
Load voltage	28 VDC or less	—	24 VDC (10 to 28 VDC)
Load current	40 mA or less		2.5 to 40 mA
Internal voltage drop	0.8 V or less at 10 mA (2 V or less at 40 mA)		4 V or less
Leakage current	100 μA or less at 24 VDC		0.8 mA or less
Indicator light	Red LED illuminates when turned ON.		
Standard	CE marking, RoHS		

Oilproof Flexible Heavy-duty Lead Wire Specifications

Auto switch model		**D-M9N**	**D-M9P**	**D-M9B**
Sheath	Outside diameter [mm]	2.6		
Insulator	Number of cores	3 cores (Brown/Blue/Black)		2 cores (Brown/Blue)
	Outside diameter [mm]	0.88		
Conductor	Effective area [mm²]	0.15		
	Strand diameter [mm]	0.05		
Min. bending radius [mm] (Reference values)		17		

∗ Refer to the **Web Catalog** for solid state auto switch common specifications.
∗ Refer to the **Web Catalog** for lead wire lengths.

Weight

[g]

Auto switch model		**D-M9N**	**D-M9P**	**D-M9B**
Lead wire length	0.5 m (**Nil**)	8		7
	1 m (**M**)	14		13
	3 m (**L**)	41		38
	5 m (**Z**)	68		63

Dimensions

[mm]

D-M9□

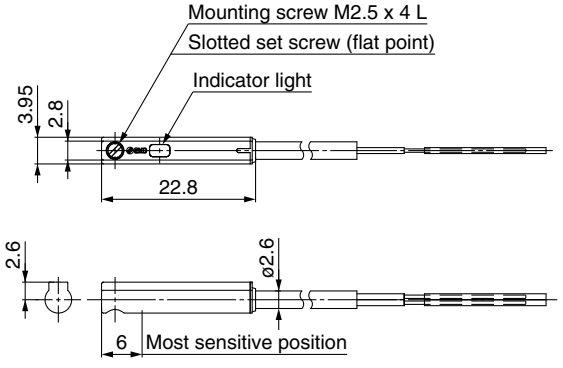

Normally Closed Solid State Auto Switch Direct Mounting Type
D-M9NE(V)/D-M9PE(V)/D-M9BE(V)

Refer to the SMC website for details on products that are compliant with international standards.

Grommet

- **Output signal turns on when no magnetic force is detected.**
- **Can be used for the actuator adopted by the solid state auto switch D-M9 series (excluding special order products)**

⚠Caution

Precautions

Fix the auto switch with the existing screw installed on the auto switch body. The auto switch may be damaged if a screw other than the one supplied is used.

Auto Switch Specifications

PLC: Programmable Logic Controller

D-M9□E, D-M9□EV (With indicator light)						
Auto switch model	D-M9NE	D-M9NEV	D-M9PE	D-M9PEV	D-M9BE	D-M9BEV
Electrical entry direction	In-line	Perpendicular	In-line	Perpendicular	In-line	Perpendicular
Wiring type	3-wire				2-wire	
Output type	NPN		PNP		—	
Applicable load	IC circuit, Relay, PLC				24 VDC relay, PLC	
Power supply voltage	5, 12, 24 VDC (4.5 to 28 V)				—	
Current consumption	10 mA or less				—	
Load voltage	28 VDC or less		—		24 VDC (10 to 28 VDC)	
Load current	40 mA or less				2.5 to 40 mA	
Internal voltage drop	0.8 V or less at 10 mA (2 V or less at 40 mA)				4 V or less	
Leakage current	100 μA or less at 24 VDC				0.8 mA or less	
Indicator light	Red LED illuminates when turned ON.					
Standard	CE marking, RoHS					

Oilproof Flexible Heavy-duty Lead Wire Specifications

Auto switch model		D-M9NE(V)	D-M9PE(V)	D-M9BE(V)
Sheath	Outside diameter [mm]	2.6		
Insulator	Number of cores	3 cores (Brown/Blue/Black)		2 cores (Brown/Blue)
	Outside diameter [mm]	0.88		
Conductor	Effective area [mm²]	0.15		
	Strand diameter [mm]	0.05		
Min. bending radius [mm] (Reference values)		17		

∗ Refer to the **Web Catalog** for solid state auto switch common specifications.
∗ Refer to the **Web Catalog** for lead wire lengths.

Weight

[g]

Auto switch model		D-M9NE(V)	D-M9PE(V)	D-M9BE(V)
Lead wire length	0.5 m (**Nil**)	8		7
	1 m (**M**)∗1	14		13
	3 m (**L**)	41		38
	5 m (**Z**)∗1	68		63

∗1 The 1 m and 5 m options are produced upon receipt of order.

Dimensions

[mm]

D-M9□E

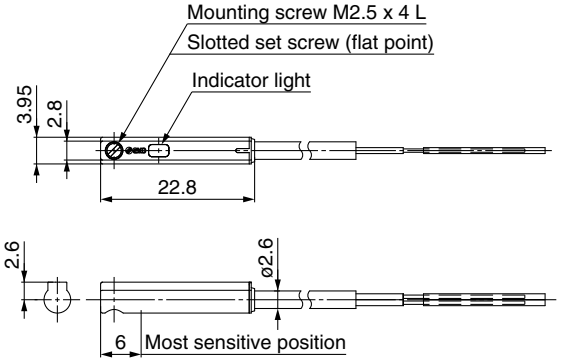

D-M9□EV

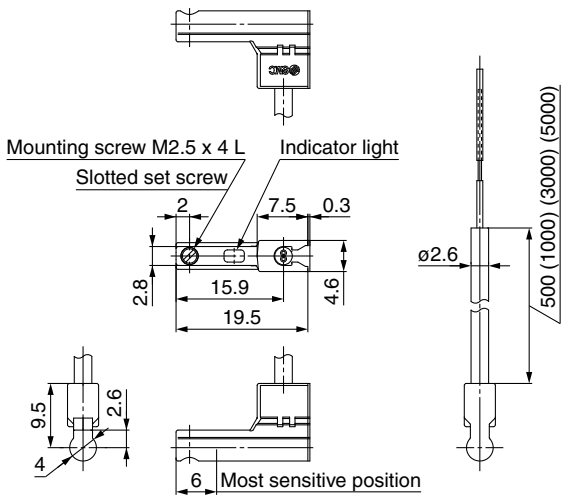

2-Color Indicator Solid State Auto Switch Direct Mounting Type
D-M9NW/D-M9PW/D-M9BW

Refer to the SMC website for details on products that are compliant with international standards.

Grommet

- **2-wire load current is reduced (2.5 to 40 mA).**
- **Using flexible cable as standard spec.**
- **The proper operating range can be determined by the color of the light. (Red → Green ← Red)**

⚠Caution

Precautions

Fix the auto switch with the existing screw installed on the auto switch body. The auto switch may be damaged if a screw other than the one supplied is used.

Auto Switch Specifications

PLC: Programmable Logic Controller

D-M9□W, D-M9□WV (With indicator light)			
Auto switch model	**D-M9NW**	**D-M9PW**	**D-M9BW**
Electrical entry direction	In-line		
Wiring type	3-wire		2-wire
Output type	NPN	PNP	—
Applicable load	IC circuit, Relay, PLC		24 VDC relay, PLC
Power supply voltage	5, 12, 24 VDC (4.5 to 28 V)		—
Current consumption	10 mA or less		—
Load voltage	28 VDC or less	—	24 VDC (10 to 28 VDC)
Load current	40 mA or less		2.5 to 40 mA
Internal voltage drop	0.8 V or less at 10 mA (2 V or less at 40 mA)		4 V or less
Leakage current	100 μA or less at 24 VDC		0.8 mA or less
Indicator light	Operating range ····· Red LED illuminates. Proper operating range ····· Green LED illuminates.		
Standard	CE marking, RoHS		

Oilproof Flexible Heavy-duty Lead Wire Specifications

Auto switch model		**D-M9NW**	**D-M9PW**	**D-M9BW**
Sheath	Outside diameter [mm]	2.6		
Insulator	Number of cores	3 cores (Brown/Blue/Black)		2 cores (Brown/Blue)
	Outside diameter [mm]	0.88		
Conductor	Effective area [mm²]	0.15		
	Strand diameter [mm]	0.05		
Min. bending radius [mm] (Reference values)		17		

∗ Refer to the **Web Catalog** for solid state auto switch common specifications.
∗ Refer to the **Web Catalog** for lead wire lengths.

Weight

[g]

Auto switch model		**D-M9NW**	**D-M9PW**	**D-M9BW**
Lead wire length	0.5 m (**Nil**)	8		7
	1 m (**M**)	14		13
	3 m (**L**)	41		38
	5 m (**Z**)	68		63

Dimensions

[mm]

D-M9□W

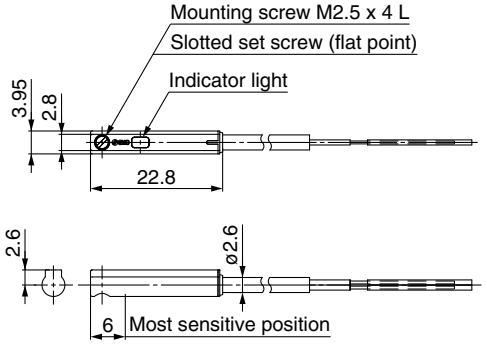

SMC

LEKFS Series
High Rigidity and High Precision Slider Type Specific Product Precautions 1

Be sure to read this before handling the products. Refer to the back cover for safety instructions. For electric actuator and auto switch precautions, refer to the "Handling Precautions for SMC Products" and the "Operation Manual" on the SMC website: https://www.smcworld.com

Design

⚠Caution

1. Do not apply a load in excess of the specification limits.

Select a suitable actuator by work load and allowable moment. If a load in excess of the specification limits is applied to the guide, adverse effects such as the generation of play in the guide, reduced accuracy, or reduced service life of the product may occur.

2. Do not use the product in applications where excessive external force or impact force is applied to it.

This can cause a malfunction.

Selection

⚠Warning

1. Do not increase the speed in excess of the specification limits.

Select a suitable actuator by the relationship between the allowable work load and speed, and the allowable speed of each stroke. If the product is used outside of the specification limits, adverse effects such as the generation of noise, reduced accuracy, or reduced service life of the product may occur.

2. Do not use the product in applications where excessive external force or impact force is applied to it.

This can cause a malfunction.

3. When the product repeatedly cycles with partial strokes (see the table below), operate it at a full stroke at least once every few dozen cycles.

Failure to do so may result in the product running out of lubrication.

Model	Partial stroke
LEKFS16	50 mm or less
LEKFS25	65 mm or less
LEKFS32	70 mm or less
LEKFS40	105 mm or less

4. When external force is to be applied to the table, it is necessary to add the external force to the work load as the total carried load when selecting a size.

When a cable duct or flexible moving tube is attached to the actuator, the sliding resistance of the table will increase, which may lead to the malfunction of the product.

Handling

⚠Caution

1. Set the [In position] in the step data to at least 0.5.

If it is set any lower, the completion signal of the [In position] may not be properly output.

2. INP output signal

1) Positioning operation

When the product comes within the set range of the step data [In position], the INP output signal will turn ON.

Initial value: Set to [0.50] or higher.

Handling

⚠Caution

3. Never allow the table to collide with the stroke end except during return to origin.

When incorrect instructions are inputted, such as those which cause the product to operate outside of the specification limits or outside of the actual stroke through changes in the controller/driver settings and/or origin position, the table may collide with the stroke end of the actuator. Be sure to check these points before use.

If the table collides with the stroke end of the actuator, the guide, belt, or internal stopper may break. This can result in abnormal operation.

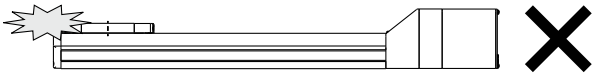

Handle the actuator with care when it is used in the vertical direction as the workpiece will fall freely from its own weight.

4. The moving force should be the initial value.

If the moving force is set below the initial value, it may cause the generation of an alarm.

5. The actual speed of this actuator is affected by the work load and stroke.

Check the model selection section of the catalog.

6. Do not apply a load, impact, or resistance in addition to the transferred load during return to origin.

Additional force will cause the displacement of the origin position since it is based on the detected motor torque.

7. Do not dent, scratch, or cause other damage to the body or table mounting surfaces.

Doing so may cause unevenness in the mounting surface, play in the guide, or an increase in the sliding resistance.

8. Do not apply strong impact or an excessive moment while mounting a workpiece.

If an external force over the allowable moment is applied, it may cause play in the guide or an increase in the sliding resistance.

9. Keep the flatness of the mounting surface within 0.1 mm/500 mm.

If a workpiece or base does not sit evenly on the body of the product, play in the guide or an increase in the sliding resistance may occur.

10. When mounting the product, secure a bending diameter of 40 mm or longer for the cable.

11. Do not allow a workpiece to collide with the table during the positioning operation or within the positioning range.

12. For the model where grease is applied to the dust seal band for sliding, when wiping off the grease to remove foreign matter, etc., be sure to reapply grease afterward.

13. When bottom mounted, the dust seal band may become warped.

LEKFS Series
High Rigidity and High Precision Slider Type Specific Product Precautions 2

Be sure to read this before handling the products. Refer to the back cover for safety instructions. For electric actuator and auto switch precautions, refer to the "Handling Precautions for SMC Products" and the "Operation Manual" on the SMC website: https://www.smcworld.com

Handling

⚠Caution

14. When mounting the product, use screws of adequate length and tighten them with adequate torque.

Tightening the screws with a higher torque than recommended may result in a malfunction and/or decrease in guide accuracy, while tightening with a lower torque can result in the displacement of the mounting position or, in extreme conditions, the actuator could become detached from its mounting position.

Body fixed

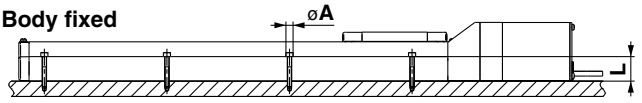

Model	Screw size	Max. tightening torque [N·m]	ø**A** [mm]	**L** [mm]
LEKFS16	M3	0.6	3.5	23.5
LEKFS25	M4	1.5	4.5	24
LEKFS32	M5	3.0	5.5	30
LEKFS40	M6	5.2	6.6	31

Body mounting

For housing B bottom

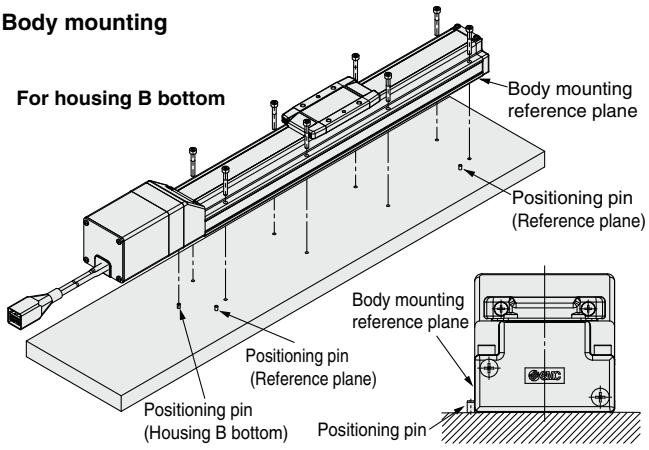

The traveling parallelism is the reference plane for the body mounting reference plane. If the traveling parallelism for a table is required, set the reference plane against parallel pins, etc.

For body bottom

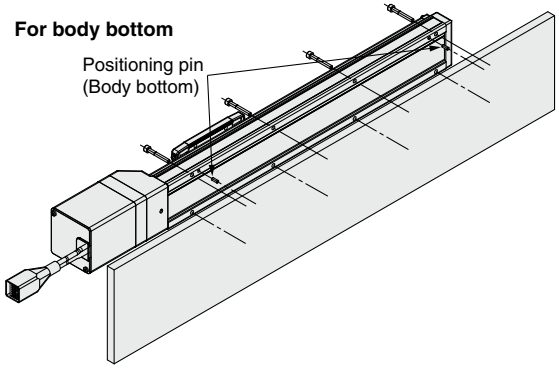

Workpiece fixed

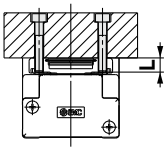

Model	Screw size	Max. tightening torque [N·m]	**L** (Max. screw-in depth) [mm]
LEKFS16	M4 x 0.7	1.5	6
LEKFS25	M5 x 0.8	3.0	8
LEKFS32	M6 x 1	5.2	9
LEKFS40	M8 x 1.25	12.5	13

To prevent the workpiece retaining screws from touching the body, use screws that are 0.5 mm or shorter than the maximum screw-in depth. If long screws are used, they may touch the body and cause a malfunction.

15. Do not operate by fixing the table and moving the actuator body.

16. Check the specifications for the minimum speed of each actuator.

Failure to do so may result in unexpected malfunctions such as knocking.

Maintenance

⚠Warning

Maintenance frequency

Perform maintenance according to the table below.

Frequency	Appearance check	Internal check	Belt check
Inspection before daily operation	○	—	—
Inspection every 6 months/1000 km/ 5 million cycles*1	○	○	○

*1 Select whichever comes first.

- **Items for visual appearance check**
  1. Loose set screws, Abnormal amount of dirt, etc.
  2. Check for visible damage, Check of cable joint
  3. Vibration, Noise
- **Items for internal check**
  1. Lubricant condition on moving parts
  2. Loose or mechanical play in fixed parts or fixing screws
- **Items for belt check**

Stop operation immediately and replace the belt when any of the following occur. In addition, ensure your operating environment and conditions satisfy the requirements specified for the product.

a. Tooth shape canvas is worn out
Canvas fiber becomes fuzzy, Rubber is coming off and the fiber has become whitish, Lines of fibers have become unclear

b. Peeling off or wearing of the side of the belt
Belt corner has become rounded and frayed threads stick out

c. Belt is partially cut
Belt is partially cut, Foreign matter caught in the teeth of other parts is causing damage

d. A vertical line on belt teeth is visible
Damage which is made when the belt runs on the flange

e. Rubber back of the belt is softened and sticky

f . Cracks on the back of the belt are visible

LEKFS Series
Battery-less Absolute Encoder Type Specific Product Precautions

Be sure to read this before handling the products. Refer to the back cover for safety instructions. For electric actuator precautions, refer to the "Handling Precautions for SMC Products" and the "Operation Manual" on the SMC website: https://www.smcworld.com

Handling

⚠Caution

1. Absolute encoder ID mismatch error at the first connection

In the following cases, an "ID mismatch error" alarm occurs after the power is turned ON. Perform a return to origin operation after resetting the alarm before use.

- When an electric actuator is connected and the power is turned ON for the first time after purchase*1
- When the actuator or motor is replaced
- When the controller is replaced

*1 If you have purchased an electric actuator and controller with the set part number, the pairing may have already been completed and the alarm may not be generated.

"ID mismatch error"

Operation is enabled by matching the encoder ID on the electric actuator side with the ID registered in the controller. This alarm occurs when the encoder ID is different from the registered contents of the controller. By resetting this alarm, the encoder ID is registered (paired) to the controller again.

When a controller is changed after pairing is completed				
	Encoder ID no. (* Numbers below are examples.)			
Actuator	17623	17623	17623	17623
Controller	17623	17699	17699	17623
ID mismatch error occurred?	No	Yes	Error reset ⇒ No	

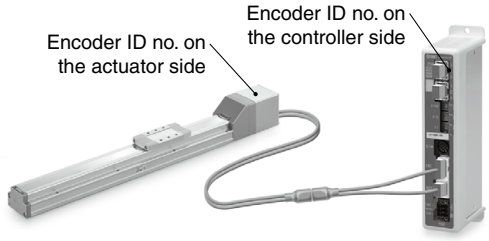

The ID number is automatically checked when the control power supply is turned ON.
An error is output if the ID number does not match.

2. In environments where strong magnetic fields are present, use may be limited.

A magnetic sensor is used in the encoder. Therefore, if the actuator motor is used in an environment where strong magnetic fields are present, malfunction or failure may occur.
Do not expose the actuator motor to magnetic fields with a magnetic flux density of 1 mT or more.
When installing an electric actuator and an air cylinder with an auto switch (ex. CDQ2 series) or multiple electric actuators side by side, maintain a space of 40 mm or more around the motor. Refer to the construction drawing of the actuator motor.

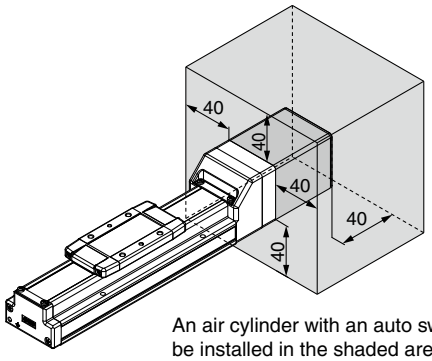

An air cylinder with an auto switch cannot be installed in the shaded area.

● When lining up actuators

SMC actuators can be used with their motors adjacent to each other. However, for actuators with a built-in auto switch magnet (LEY and LEF series), maintain a space of 40 mm or more between the motors and the position where the magnet passes. For the LEF series, the magnet is in the middle of the table, and for the LEY series, the magnet is in the piston portion. (Refer to the construction drawings in the catalog for details.)

○ Can be used with their motors adjacent to each other

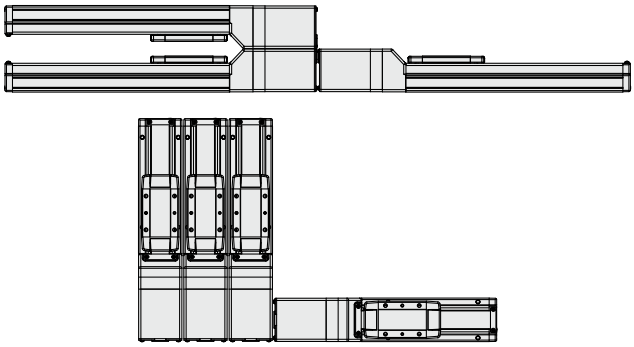

✕ Do not allow the motors to be in close proximity to the position where the magnet passes.

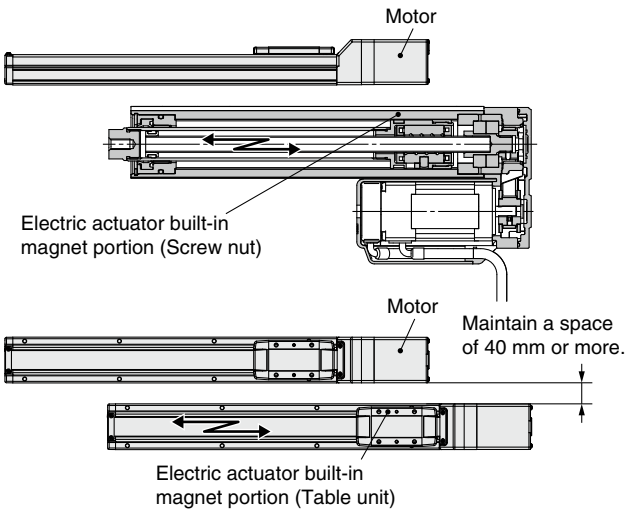

3. The connector size of the motor cable is different from that of the electric actuator with an incremental encoder.

The motor cable connector of an electric actuator with a battery-less absolute encoder is different from that of an electric actuator with an incremental encoder. As the connector cover dimensions are different, take the dimensions below into consideration during the design process.

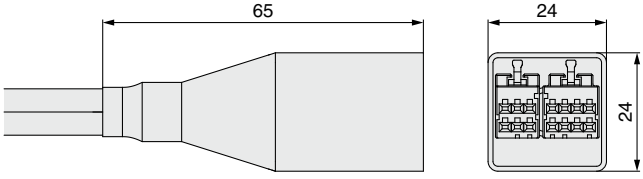

Battery-less absolute encoder connector cover dimensions

Controllers
JXC□ Series

For details, refer to page 128.

Step Data Input Type ..... p. 79

Battery-less Absolute (Step Motor 24 VDC)

JXC51/61 Series

EtherCAT/EtherNet/IP™/PROFINET/DeviceNet®/IO-Link/CC-Link Direct Input Type ..... p. 86

Battery-less Absolute (Step Motor 24 VDC)

JXC□ Series

EtherCAT®

With STO sub-function

EtherNet/IP®

PROFINET®

DeviceNet®

IO-Link

With STO sub-function

CC-Link

- **Actuator Cable** p. 93
- **Precautions Relating to Differences in Controller Versions** p. 94

Controller (Step Data Input Type)

JXC51/61 Series

For details, refer to page 128.

How to Order

JXC 5 1 7 1 – ☐

❶ ❷ ❸ ❹

❶ Parallel I/O type

5	NPN
6	PNP

❷ Mounting

7	Screw mounting
8∗1	DIN rail

∗1 The DIN rail is not included. It must be ordered separately.

❸ I/O cable length [m]

Nil	None
1	1.5
3	3
5	5

❹ Actuator part number

Without cable specifications and actuator options Example: Enter "**LEKFS25EA-100**" for the LEKFS25EA-100B-R1☐☐.	
BC	Blank controller∗1

∗1 Requires dedicated software (JXC-BCW)

The controller is sold as single unit after the compatible actuator is set.

Confirm that the combination of the controller and actuator is correct.

<Check the following before use.>

① Check the actuator label for the model number. This number should match that of the controller.

② Check that the Parallel I/O configuration matches (NPN or PNP).

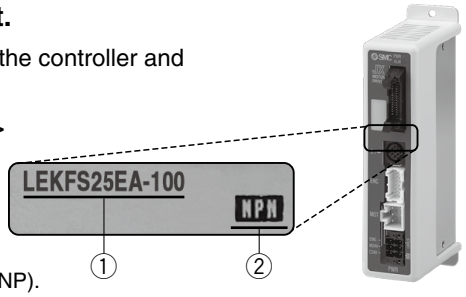

∗ Refer to the operation manual for using the products. Please download it via our website: https://www.smcworld.com

Precautions for blank controllers (JXC☐1☐☐-BC)

A blank controller is a controller to which the customer can write the data of the actuator it is to be combined and used with. For data writing, use the controller setting software ACT Controller 2 or the dedicated software JXC-BCW.

- Both ACT Controller 2 and JXC-BCW can be downloaded from the SMC website.
- To use this software, order the communication cable for controller setting (JXC-W2A-C) and the USB cable (LEC-W2-U) separately.

Hardware Requirements

OS	Windows®10 (64 bit)	Windows®7
		Windows®8
	Windows®11	Windows®10
Software	ACT Controller 2 (With JXC-BCW function)	JXC-BCW

∗ Windows®7, Windows®8, Windows®10, and Windows®11 are registered trademarks of Microsoft Corporation in the United States.

SMC website
https://www.smcworld.com

Specifications

Model	JXC51 JXC61
Compatible motor	Step motor (Servo/24 VDC)
Power supply	Power voltage: 24 VDC ±10%
Current consumption (Controller)	100 mA or less
Compatible encoder	Battery-less absolute
Parallel input	11 inputs (Photo-coupler isolation)
Parallel output	13 outputs (Photo-coupler isolation)
Serial communication	RS485 (Only for the LEC-T1 and JXC-W2)
Memory	EEPROM
LED indicator	PWR, ALM
Cable length [m]	Actuator cable: 20 or less
Cooling system	Natural air cooling
Operating temperature range [°C]	0 to 55°C (No freezing)
Operating humidity range [%RH]	90 or less (No condensation)
Enclosure	IP30 (Excludes the connector)
Insulation resistance [MΩ]	Between all external terminals and the case: 50 (500 VDC)
Weight [g]	150 (Screw mounting), 170 (DIN rail mounting)

How to Mount

a) Screw mounting (JXC□17□-□)
(Installation with two M4 screws)

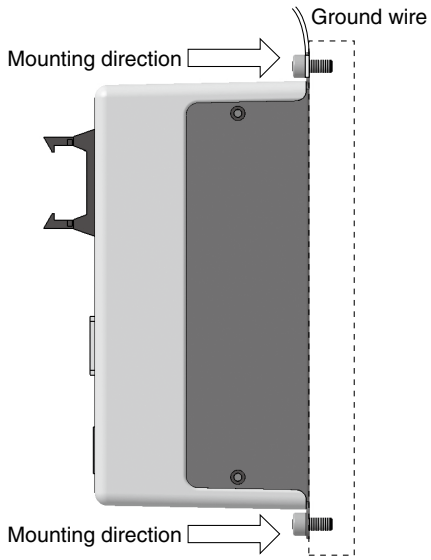

b) DIN rail mounting (JXC□18□-□)
(Installation with the DIN rail)

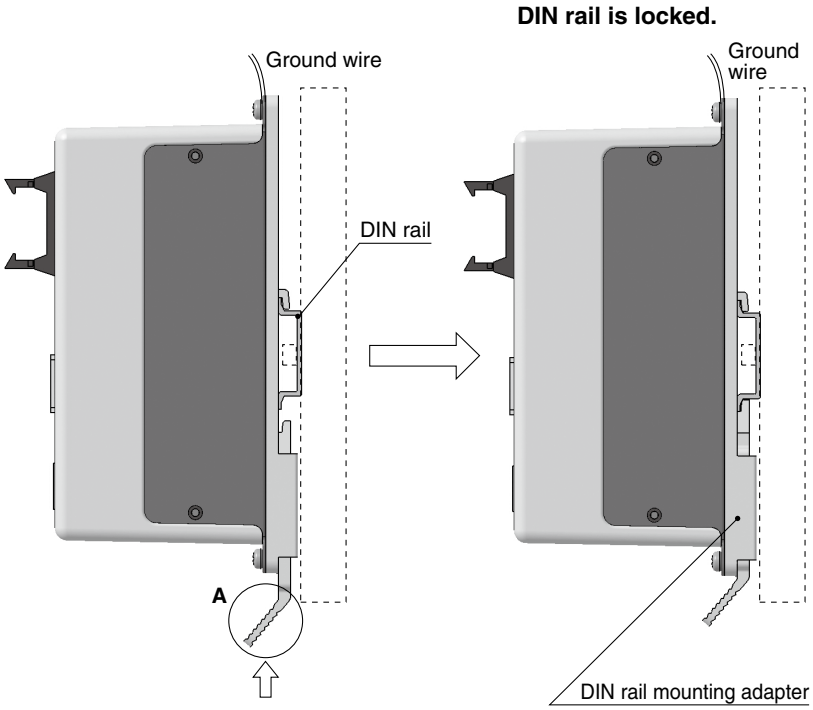

Hook the controller on the DIN rail and press the lever of section **A** in the arrow direction to lock it.

∗ When size 25 or more of the LE series are used, the space between the controllers should be 10 mm or more.

DIN rail
AXT100-DR-□

∗ For □, enter a number from the No. line in the table below.
Refer to the dimension drawings on page 81 for the mounting dimensions.

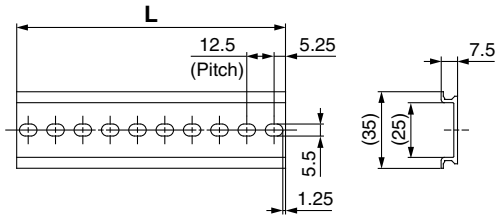

L Dimensions [mm]

No.	1	2	3	4	5	6	7	8	9	10	11	12	13	14	15	16	17	18	19	20
L	23	35.5	48	60.5	73	85.5	98	110.5	123	135.5	148	160.5	173	185.5	198	210.5	223	235.5	248	260.5
No.	21	22	23	24	25	26	27	28	29	30	31	32	33	34	35	36	37	38	39	40
L	273	285.5	298	310.5	323	335.5	348	360.5	373	385.5	398	410.5	423	435.5	448	460.5	473	485.5	498	510.5

DIN rail mounting adapter
LEC-D0 (with 2 mounting screws)

This should be used when the DIN rail mounting adapter is mounted onto a screw mounting type controller afterward.

Dimensions

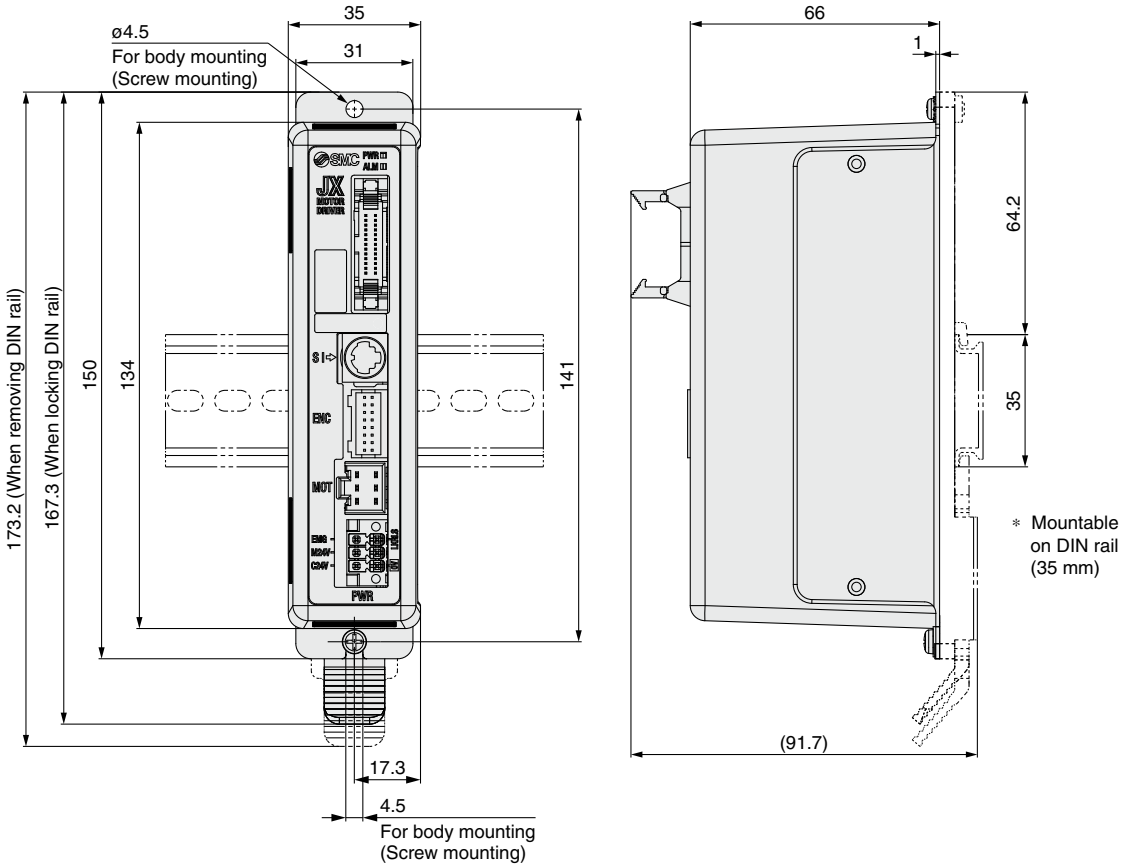
35
31
ø4.5
For body mounting
(Screw mounting)
173.2 (When removing DIN rail)
167.3 (When locking DIN rail)
150
134
141
17.3
4.5
For body mounting
(Screw mounting)
66
1
64.2
35
(91.7)
* Mountable
on DIN rail
(35 mm)

Wiring Example

Parallel I/O Connector

* When you connect a PLC to the parallel I/O connector, use the I/O cable (LEC-CN5-□).
* The wiring changes depending on the type of parallel I/O (NPN or PNP).

Wiring diagram

JXC51□□-□ (NPN)

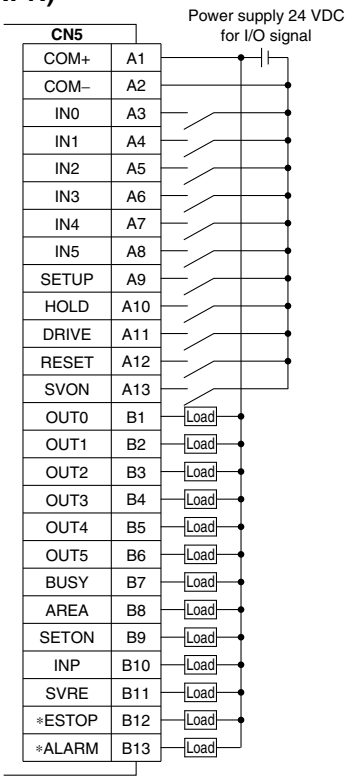

JXC61□□-□ (PNP)

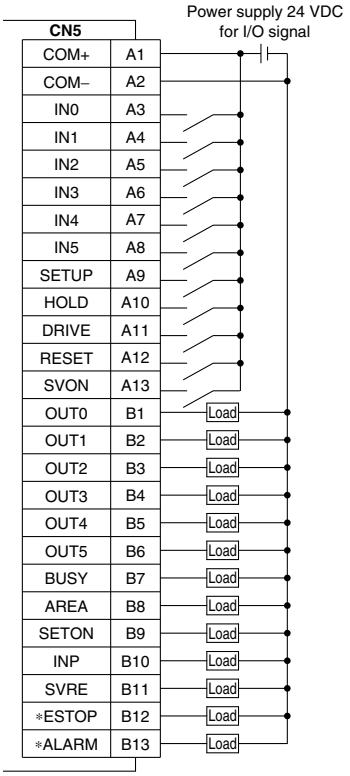

Input Signal

Name	Details
COM+	Connects the power supply 24 V for input/output signal
COM–	Connects the power supply 0 V for input/output signal
IN0 to IN5	Step data specified bit no. (Input is instructed by combining IN0 to 5.)
SETUP	Instruction to return to origin
HOLD	Temporarily stops operation
DRIVE	Instruction to drive
RESET	Resets alarm and interrupts operation
SVON	Servo ON instruction

Output Signal

Name	Details
OUT0 to OUT5	Outputs the step data no. during operation
BUSY	Outputs when the actuator is moving
AREA	Outputs within the step data area output setting range
SETON	Outputs when returning to origin
INP	Outputs when target position or target force is reached*2 (Turns on when the positioning or pushing is completed.)
SVRE	Outputs when servo is on
*ESTOP*1	OFF when EMG stop is instructed
*ALARM*1	OFF when alarm is generated

*1 Signal of negative-logic circuit (N.C.)

*2 Check the catalog and operation manual of each actuator model which is capable of performing pushing operations.
The “Specifications” table for models which are capable of performing pushing operations includes an item for the pushing force.

Step Data Setting

1. Step data setting for positioning

In this setting, the actuator moves toward and stops at the target position.
The following diagram shows the setting items and operation.
The setting items and set values for this operation are stated below.

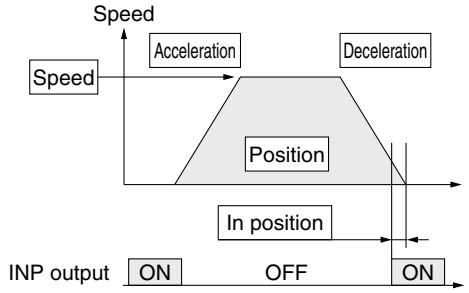

◎: Need to be set.
○: Need to be adjusted as required.
—: Setting is not required.

Step Data (Positioning)

Necessity	Item	Details
◎	Movement MOD	When the absolute position is required, set Absolute. When the relative position is required, set Relative.
◎	Speed	Transfer speed to the target position
◎	Position	Target position
○	Acceleration	Parameter which defines how rapidly the actuator reaches the speed set. The higher the set value, the faster it reaches the speed set.
○	Deceleration	Parameter which defines how rapidly the actuator comes to stop. The higher the set value, the quicker it stops.
◎	Pushing force*1	Set 0. (If values 1 to 100 are set, the operation will be changed to the pushing operation.)
—	Trigger LV	Setting is not required.
—	Pushing speed	Setting is not required.
○	Moving force	Max. torque during the positioning operation (No specific change is required.)
○	Area 1, Area 2	Condition that turns on the AREA output signal.
○	In position	Condition that turns on the INP output signal. When the actuator enters the range of [in position], the INP output signal turns on. (It is unnecessary to change this from the initial value.) When it is necessary to output the arrival signal before the operation is completed, make the value larger.

*1 Check the catalog and operation manual of each actuator model which is capable of performing pushing operations.
The "Specifications" table for models which are capable of performing pushing operations includes an item for the pushing force.

2. Step data setting for pushing*2

The actuator moves toward the pushing start position, and when it reaches that position, it starts pushing with the set force or less.
The following diagram shows the setting items and operation.
The setting items and set values for this operation are stated below.

*2 Check the catalog and operation manual of each actuator model which is capable of performing pushing operations.
The "Specifications" table for models which are capable of performing pushing operations includes an item for the pushing force.

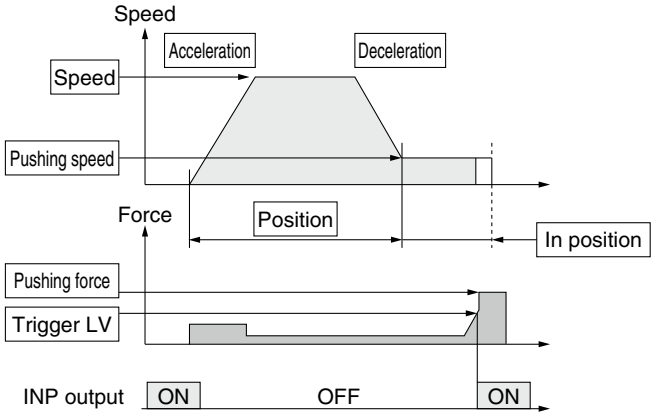

◎: Need to be set.
○: Need to be adjusted as required.

Step Data (Pushing)

Necessity	Item	Details
◎	Movement MOD	When the absolute position is required, set Absolute. When the relative position is required, set Relative.
◎	Speed	Transfer speed to the pushing start position
◎	Position	Pushing start position
○	Acceleration	Parameter which defines how rapidly the actuator reaches the speed set. The higher the set value, the faster it reaches the speed set.
○	Deceleration	Parameter which defines how rapidly the actuator comes to stop. The higher the set value, the quicker it stops.
◎	Pushing force*3	Pushing force ratio is defined. The setting range differs depending on the electric actuator type. Refer to the operation manual for the electric actuator.
◎	Trigger LV	Condition that turns on the INP output signal. The INP output signal turns on when the generated force exceeds the value. Trigger level should be the pushing force or less.
○	Pushing speed*3	Pushing speed during pushing. When the speed is set fast, the electric actuator and workpieces might be damaged due to the impact when they hit the end, so this set value should be smaller. Refer to the operation manual for the electric actuator.
○	Moving force	Max. torque during the positioning operation (No specific change is required.)
○	Area 1, Area 2	Condition that turns on the AREA output signal.
◎	In position	Transfer distance during pushing. If the transferred distance exceeds the setting, it stops even if it is not pushing. If the transfer distance is exceeded, the INP output signal will not turn on.

*3 Check the catalog and operation manual of each actuator model which is capable of performing pushing operations.
The "Specifications" table for models which are capable of performing pushing operations includes an item for the pushing force.

Signal Timing

Return to Origin

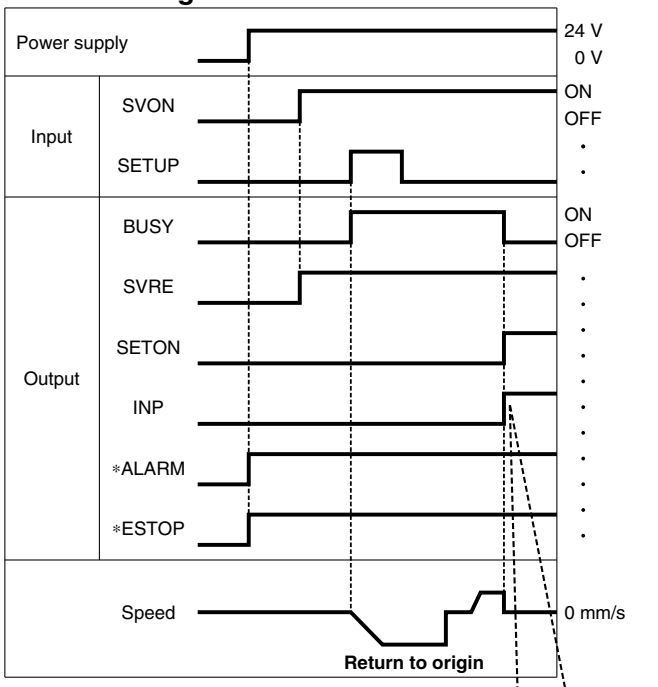

∗ "∗ALARM" and "∗ESTOP" are expressed as negative-logic circuits.

Positioning Operation

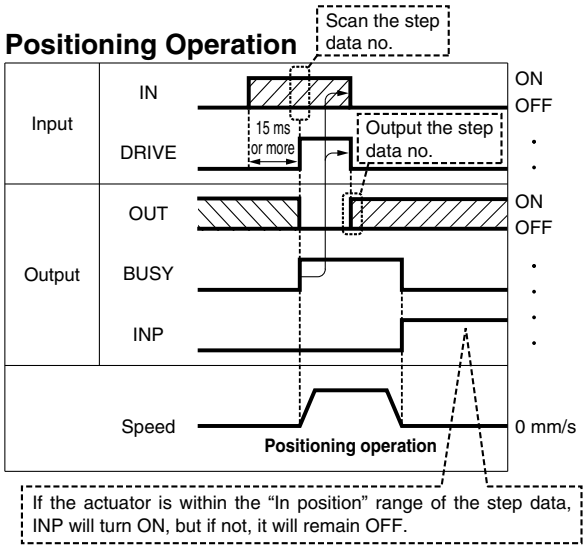

∗ "OUT" is output when "DRIVE" is changed from ON to OFF.
Refer to the operation manual for details on the controller for the LEM series.
(When power supply is applied, "DRIVE" or "RESET" is turned ON or "∗ESTOP" is turned OFF, all of the "OUT" outputs are OFF.)

Pushing Operation

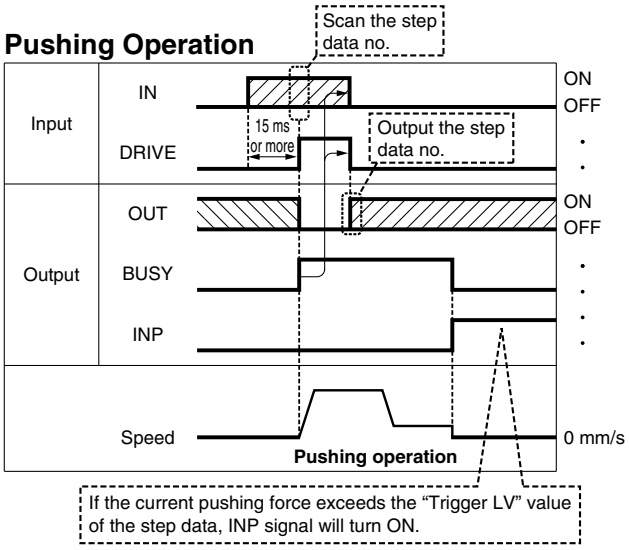

∗1 Check the catalog and operation manual of each actuator model which is capable of performing pushing operations.
The "Specifications" table for models which are capable of performing pushing operations includes an item for the pushing force.

HOLD

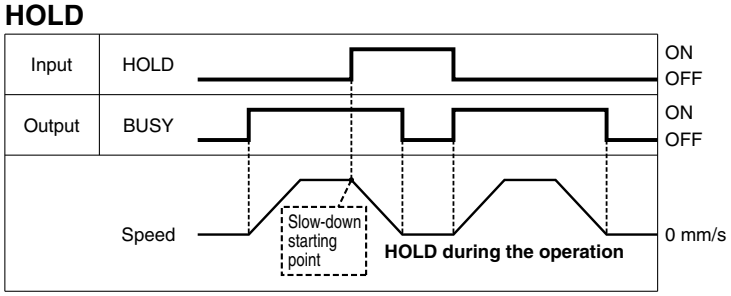

∗ When the actuator is within the "In position" range in the pushing operation, it does not stop even if HOLD signal is input.

Reset

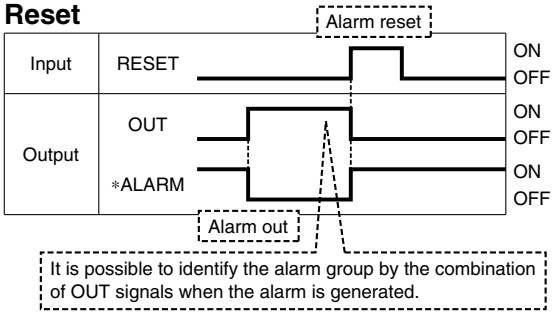

∗ "∗ALARM" is expressed as a negative-logic circuit.

Options

■ Communication cable for controller setting

① Communication cable JXC-W2A-C

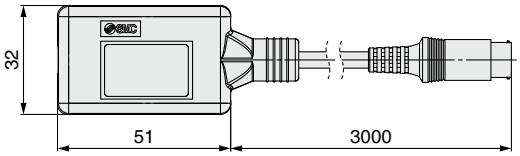

∗ It can be connected to the controller directly.

② USB cable LEC-W2-U

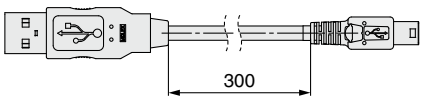

③ Controller setting kit JXC-W2A

A set which includes a communication cable (JXC-W2A-C) and a USB cable (LEC-W2-U)

<Controller setting software/USB driver>
· Controller setting software
· USB driver (For JXC-W2A-C)
Download from SMC's website: https://www.smcworld.com

Hardware Requirements

OS	Windows®7, Windows®8.1, Windows®10, Windows®11
Communication interface	USB 1.1 or USB 2.0 ports
Display	1024 x 768 or more

∗ Windows®7, Windows®8.1, Windows®10, and Windows®11 are registered trademarks of Microsoft Corporation in the United States.

■ Conversion cable P5062-5 (Cable length: 300 mm)

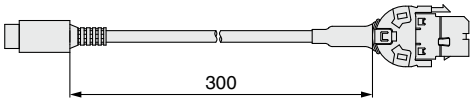

∗ To connect the teaching box (LEC-T1-3□G□) or communication cable for controller setting (LEC-W2A-C) to the controller, a conversion cable is required.

■ I/O Cable

LEC − CN5 − [1]

Cable length (L) [m]

1	1.5
3	3
5	5

∗ Conductor size: AWG28

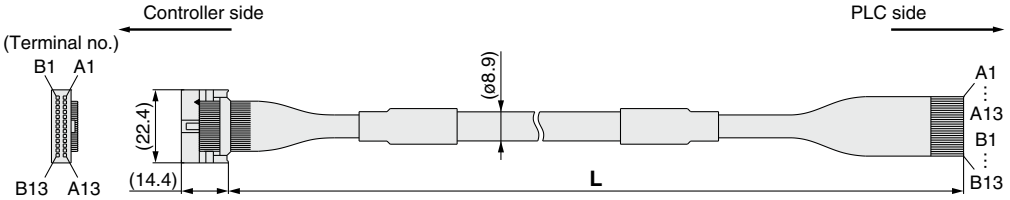

Connector pin no.	Insulation color	Dot mark	Dot color
A1	Light brown	■	Black
A2	Light brown	■	Red
A3	Yellow	■	Black
A4	Yellow	■	Red
A5	Light green	■	Black
A6	Light green	■	Red
A7	Gray	■	Black
A8	Gray	■	Red
A9	White	■	Black
A10	White	■	Red
A11	Light brown	■ ■	Black
A12	Light brown	■ ■	Red
A13	Yellow	■ ■	Black

Connector pin no.	Insulation color	Dot mark	Dot color
B1	Yellow	■ ■	Red
B2	Light green	■ ■	Black
B3	Light green	■ ■	Red
B4	Gray	■ ■	Black
B5	Gray	■ ■	Red
B6	White	■ ■	Black
B7	White	■ ■	Red
B8	Light brown	■ ■ ■	Black
B9	Light brown	■ ■ ■	Red
B10	Yellow	■ ■ ■	Black
B11	Yellow	■ ■ ■	Red
B12	Light green	■ ■ ■	Black
B13	Light green	■ ■ ■	Red
—	Shield		

Weight

Product no.	Weight [g]
LEC-CN5-1	170
LEC-CN5-3	320
LEC-CN5-5	520

■ Power supply plug JXC-CPW

∗ The power supply plug is an accessory.

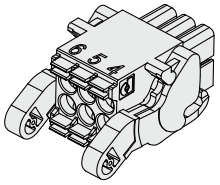

<Applicable cable size>
AWG20 (0.5 mm²), cover diameter 2.0 mm or less

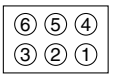

① C24V ④ 0V
② M24V ⑤ N.C.
③ EMG ⑥ LK RLS

Power supply plug

Terminal name	Function	Details
0V	Common supply (–)	The M24V terminal, C24V terminal, EMG terminal, and LK RLS terminal are common (–).
M24V	Motor power supply (+)	Motor power supply (+) of the controller
C24V	Control power supply (+)	Control power supply (+) of the controller
EMG	Stop (+)	Connection terminal of the external stop circuit
LK RLS	Lock release (+)	Connection terminal of the lock release switch

■ Teaching box

LEC − T1 − 3 [J] [G] [ ]

Teaching box

Cable length [m]

3	3

Initial language

J	Japanese
E	English

∗ The displayed language can be changed to English or Japanese.

Enable switch

Nil	None
S	Equipped with enable switch

∗ Interlock switch for jog and test function

Stop switch

G	Equipped with stop switch

Specifications

Item	Description
Switch	Stop switch, Enable switch (Option)
Cable length [m]	3
Enclosure	IP64 (Except connector)
Operating temperature range [°C]	5 to 50
Operating humidity range [%RH]	90 or less (No condensation)
Weight [g]	350 (Except cable)

Step Motor Controller

JXCE□/9□/P□/D1/L□/M1 Series

For details, refer to page 128.

RoHS

How to Order

JXC D 1 7 T – □

❶ ❷ ❸ ❹ ❺

❶ Communication protocol

		Standard	With STO sub-function
E	EtherCAT	●	●
9	EtherNet/IP™	●	●
P	PROFINET	●	●
D	DeviceNet®	●	—
L	IO-Link	●	●
M	CC-Link	●	—

❷ Number of axes, Special specification

1	1 axis, Standard
F	1 axis, With STO sub-function

❸ Mounting

7	Screw mounting
8∗1	DIN rail

∗1 The DIN rail is not included. It must be ordered separately. (Refer to page 90.)

❹ Option

Nil	Without option
S	With straight type communication plug
T	With T-branch type communication plug

∗ Select "Nil" for anything other than JXCD1 and JXCM1.

❺ Actuator part number

Without cable specifications and actuator options Example: Enter "**LEKFS25EB-100**" for the LEKFS25EB-100B-R1□□.	
BC	Blank controller∗1

∗1 Requires dedicated software (JXC-BCW)

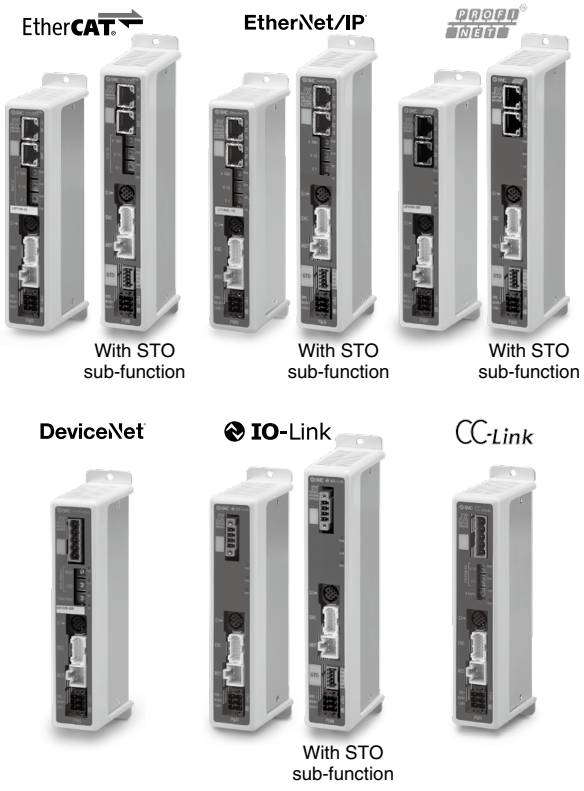

The controller is sold as single unit after the compatible actuator is set.

Confirm that the combination of the controller and actuator is correct.

① Check the actuator label for the model number. This number should match that of the controller.

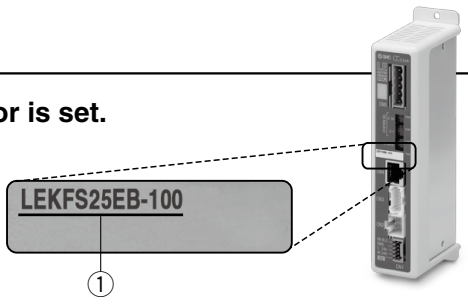

∗ Refer to the operation manual for using the products. Please download it via our website: https://www.smcworld.com

Precautions for blank controllers (JXC□□□□-BC)

A blank controller is a controller to which the customer can write the data of the actuator it is to be combined and used with. For data writing, use the controller setting software ACT Controller 2 or the dedicated software JXC-BCW.

- Both ACT Controller 2 and JXC-BCW can be downloaded from the SMC website.
- To use this software, order the communication cable for controller setting (JXC-W2A-C) and the USB cable (LEC-W2-U) separately.

Hardware Requirements

OS	Windows®10 (64 bit)	Windows®11	Windows®7	Windows®8	Windows®10
Software	ACT Controller 2 (With JXC-BCW function)		JXC-BCW		

∗ Windows®7, Windows®8, Windows®10, and Windows®11 are registered trademarks of Microsoft Corporation in the United States.

SMC website: https://www.smcworld.com

Specifications

Model			JXCE1	JXCEF	JXC91	JXC9F	JXCP1	JXCPF	JXCD1	JXCL1	JXCLF	JXCM1
Network			EtherCAT		EtherNet/IP™		PROFINET		DeviceNet®	IO-Link		CC-Link
Compatible motor			Step motor (Servo/24 VDC)									
Power supply			Power voltage: 24 VDC ±10%									
Current consumption (Controller)			200 mA or less		130 mA or less		200 mA or less		100 mA or less	100 mA or less		100 mA or less
Compatible encoder			Battery-less absolute									
Communication specifications	Applicable system	Protocol	EtherCAT*2		EtherNet/IP™*2		PROFINET*2		DeviceNet®	IO-Link		CC-Link
		Version*1	Conformance Test Record V.1.2.6		Volume 1 (Edition 3.14) Volume 2 (Edition 1.15)		Specification Version 2.32		Volume 1 (Edition 3.14) Volume 3 (Edition 1.13)	Version 1.1 Port Class A		Ver. 1.10
	Communication speed		100 Mbps*2		10/100 Mbps*2 (Automatic negotiation)		100 Mbps*2		125/250/500 kbps	230.4 kbps (COM3)		156 kbps, 625 kbps, 2.5 Mbps, 5 Mbps, 10 Mbps
	Configuration file*3		ESI file		EDS file		GSDML file		EDS file	IODD file		CSP+ file
	I/O occupation area		Input 20 bytes Output 36 bytes		Input 36 bytes Output 36 bytes		Input 36 bytes Output 36 bytes		Input 4, 10, 20 bytes Output 4, 12, 20, 36 bytes	Input 14 bytes Output 22 bytes		1 station, 2 stations, 4 stations
	Terminating resistor		Not included									
Memory			EEPROM									
LED indicator			PWR, RUN, ALM, ERR		PWR, ALM, MS, NS		PWR, ALM, SF, BF		PWR, ALM, MS, NS	PWR, ALM, COM		PWR, ALM, L ERR, L RUN
Cable length [m]			Actuator cable: 20 or less									
Cooling system			Natural air cooling									
Operating temperature range [°C]			0 to 55 (No freezing)*4									
Operating humidity range [%RH]			90 or less (No condensation)									
Enclosure			IP30 (Excludes the connector)									
Insulation resistance [MΩ]			Between all external terminals and the case: 50 (500 VDC)									
Safety function			—	STO,SS1-t	—	STO,SS1-t	—	STO,SS1-t	—		STO, SS1-t	—
Safety standards			—	EN61508 SIL3*5 EN62061 SIL CL3*5 EN ISO13849-1 Cat.3 PLe*5	—	EN61508 SIL3*5 EN62061 SIL CL3*5 EN ISO13849-1 Cat.3 PLe*5	—	EN61508 SIL3*5 EN62061 SIL CL3*5 EN ISO13849-1 Cat.3 PLe*5	—		EN 61508 SIL 3*5 EN 62061 SIL CL 3*5 EN ISO 13849-1 Cat. 3 PL e*5	—
Weight [g]	Screw mounting		220	250	210	240	220	250	210	190	220	170
	DIN rail mounting		240	270	230	260	240	270	230	210	240	190

*1 Please note that versions are subject to change.
*2 Use a shielded communication cable with CAT5 or higher for the PROFINET, EtherNet/IP™, and EtherCAT.
*3 The files can be downloaded from the SMC website.
*4 The operating temperature range for both controller version 1 products and controller version 2 products is 0 to 40°C. Refer to the **Web Catalog** for details on identifying controller version symbols.
*5 The above safety integrity level is the max. value. The achievable level varies depending on the configuration and inspection method of the component. Be sure to refer to "Safety Manual: JXC#-OMY0009" for more information.

■Trademark
EtherNet/IP® is a registered trademark of ODVA, Inc.
DeviceNet® is a registered trademark of ODVA, Inc.
EtherCAT® is registered trademark and patented technology, licensed by Beckhoff Automation GmbH, Germany.

Example of Operation Command

In addition to the step data input of 64 points maximum in each communication protocol, the changing of each parameter can be performed in real time via numerical data defined operation.
* Numerical values other than "Moving force," "Area 1," and "Area 2" can be used to perform operation under numerical instructions from JXCL1.

<Application example> Movement between 2 points

No.	Movement mode	Speed	Position	Acceleration	Deceleration	Pushing force	Trigger LV	Pushing speed	Moving force	Area 1	Area 2	In position
0	1: Absolute	100	10	3000	3000	0	0	0	100	0	0	0.50
1	1: Absolute	100	100	3000	3000	0	0	0	100	0	0	0.50

<Step no. defined operation>
Sequence 1: Servo ON instruction
Sequence 2: Instruction to return to origin
Sequence 3: Specify step data No. 0 to input the DRIVE signal.
Sequence 4: Specify step data No. 1 after the DRIVE signal has been temporarily turned OFF to input the DRIVE signal.

<Numerical data defined operation>
Sequence 1: Servo ON instruction
Sequence 2: Instruction to return to origin
Sequence 3: Specify step data No. 0 and turn ON the input instruction flag (position). Input 10 in the target position. Subsequently the start flag turns ON.
Sequence 4: Turn ON step data No. 0 and the input instruction flag (position) to change the target position to 100 while the start flag is ON.

The same operation can be performed with any operation command.

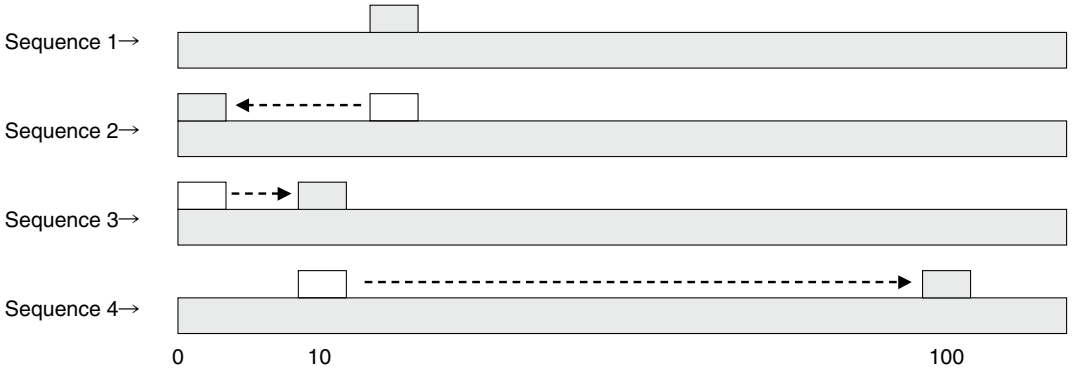

How to Mount

a) Screw mounting (JXC□17-□, JXC□F7-□)
(Installation with two M4 screws)

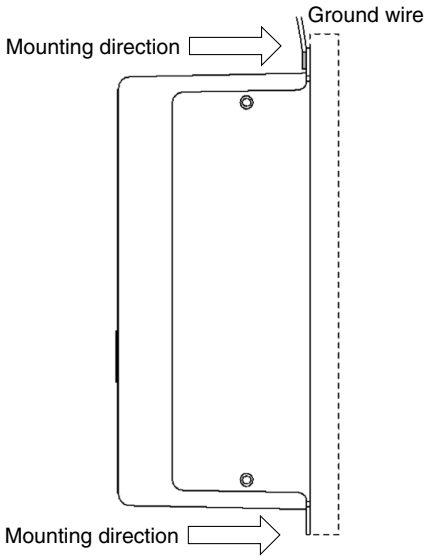

b) DIN rail mounting (JXC□18-□, JXC□F8-□)
(Installation with the DIN rail)

Before locked onto DIN rail **DIN rail is locked.**

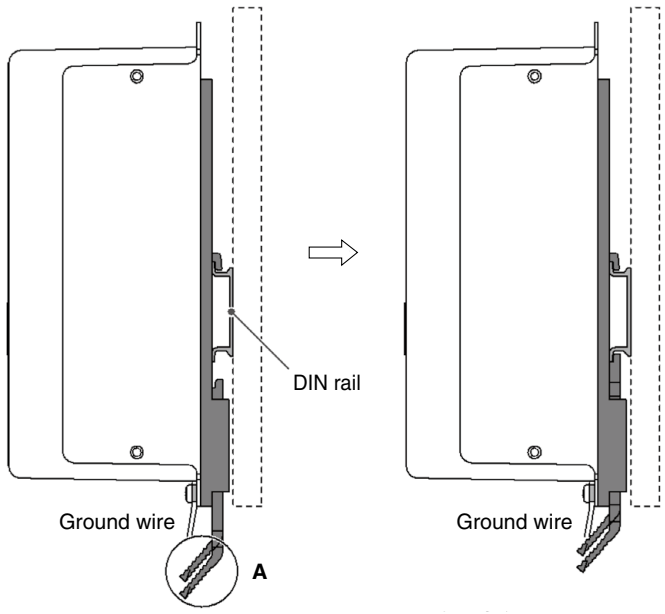

Hook the controller on the DIN rail and press the lever of section A in the arrow direction to lock it.

∗ When size 25 or more of the LE series are used, the space between the controllers should be 10 mm or more.

DIN rail
AXT100-DR-□

∗ For □, enter a number from the No. line in the table below.
Refer to the dimension drawings on pages 88 to 90 for the mounting dimensions.

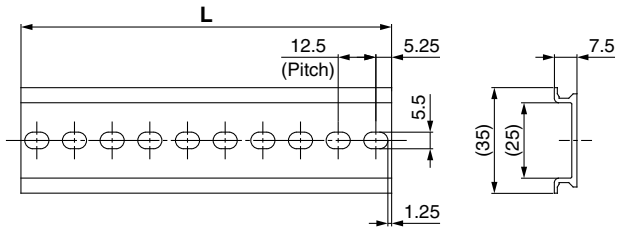

L Dimensions [mm]

No.	1	2	3	4	5	6	7	8	9	10	11	12	13	14	15	16	17	18	19	20
L	23	35.5	48	60.5	73	85.5	98	110.5	123	135.5	148	160.5	173	185.5	198	210.5	223	235.5	248	260.5

No.	21	22	23	24	25	26	27	28	29	30	31	32	33	34	35	36	37	38	39	40
L	273	285.5	298	310.5	323	335.5	348	360.5	373	385.5	398	410.5	423	435.5	448	460.5	473	485.5	498	510.5

DIN rail mounting adapter
LEC-3-D0 (with 2 mounting screws)

This should be used when the DIN rail mounting adapter is mounted onto a screw mounting type controller afterward.

Dimensions

JXCE1

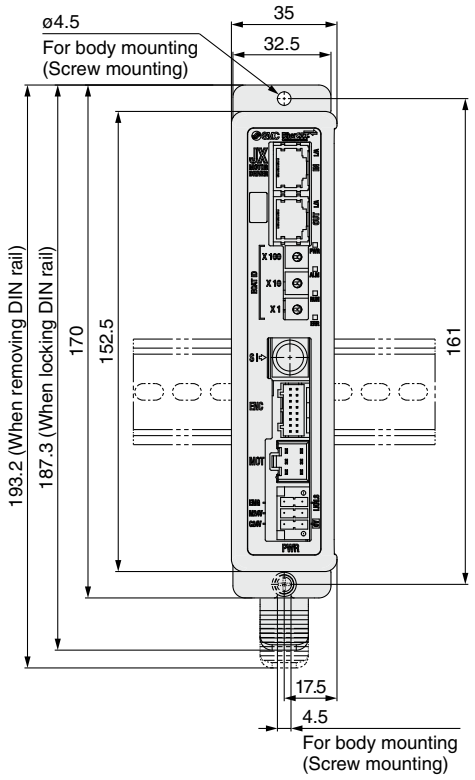

JXC91

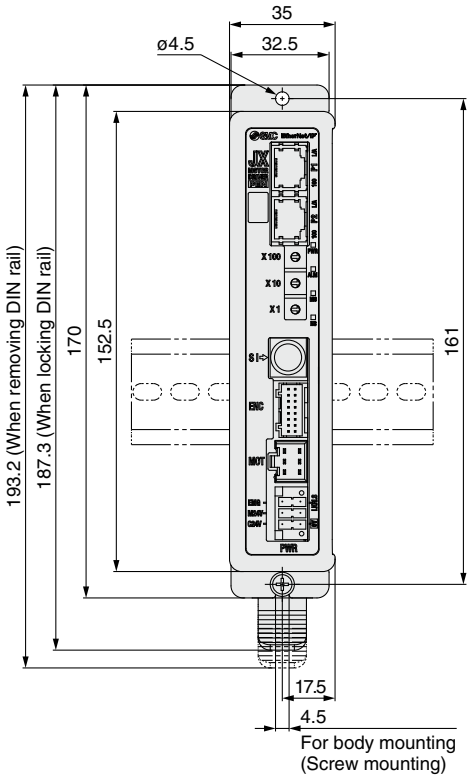

JXCE1/JXC91

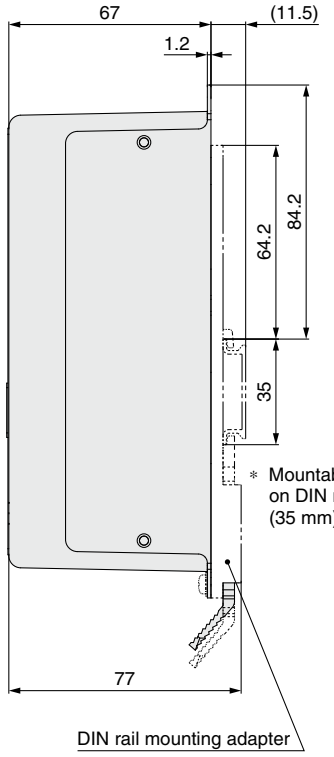

JXCP1

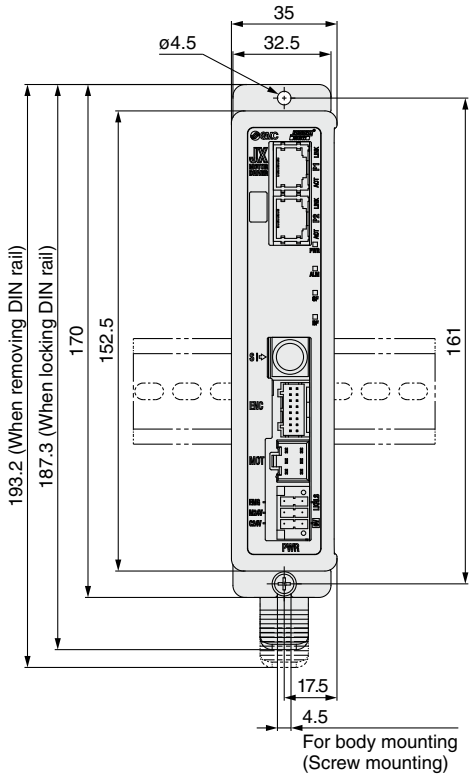

JXCD1

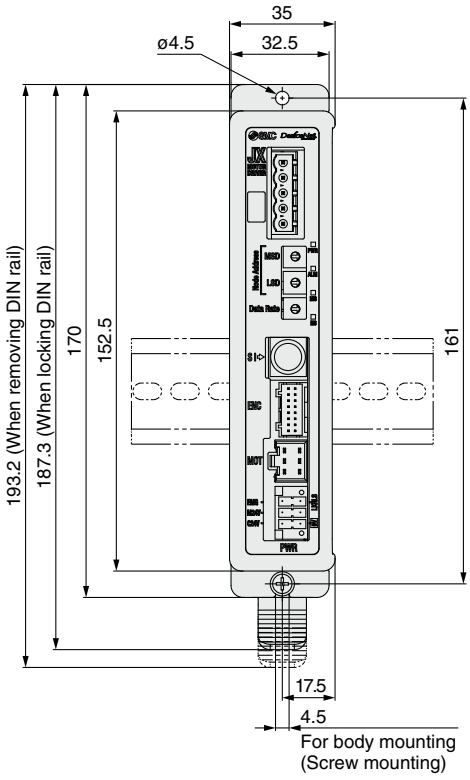

JXCP1/JXCD1

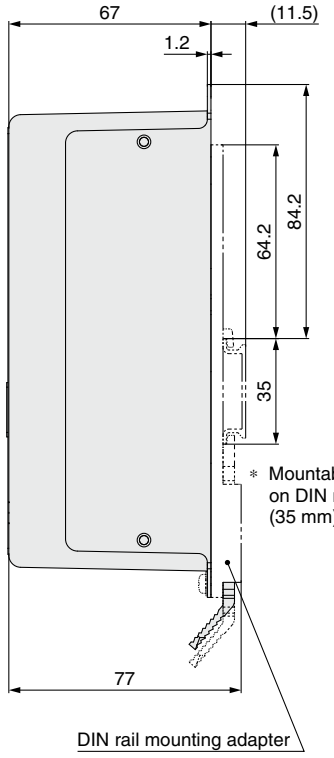

Dimensions

JXCL1

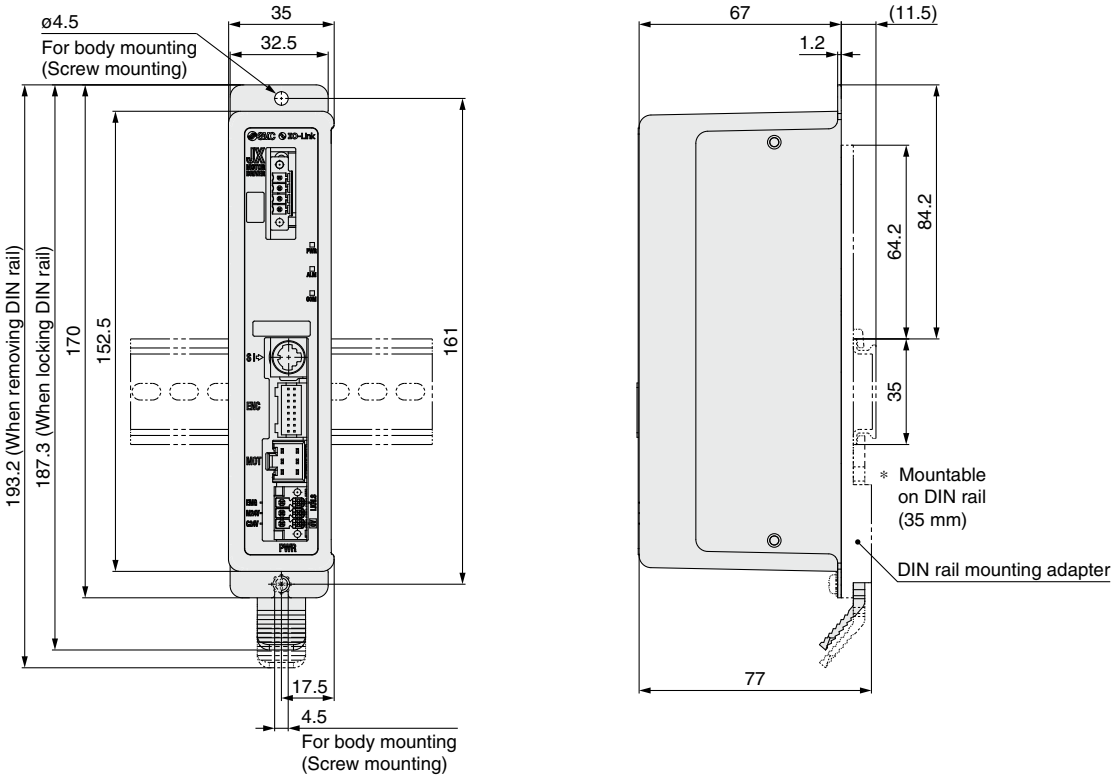

JXCM1

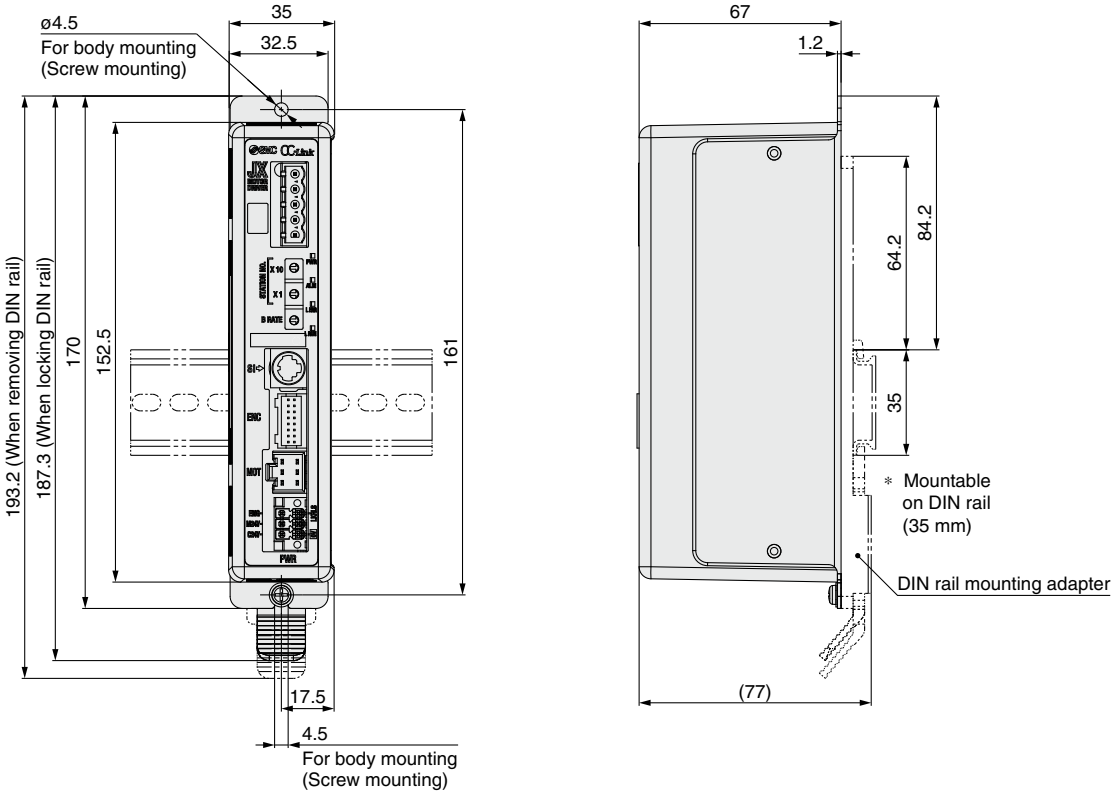

Dimensions

JXCEF

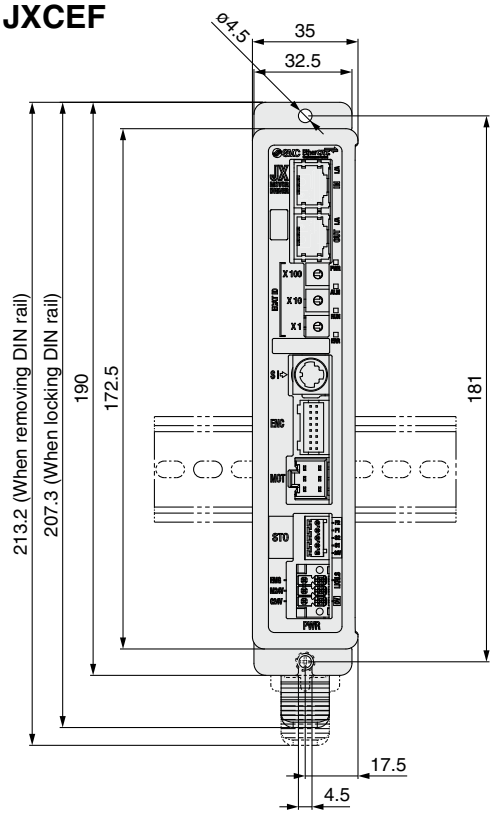

JXCLF

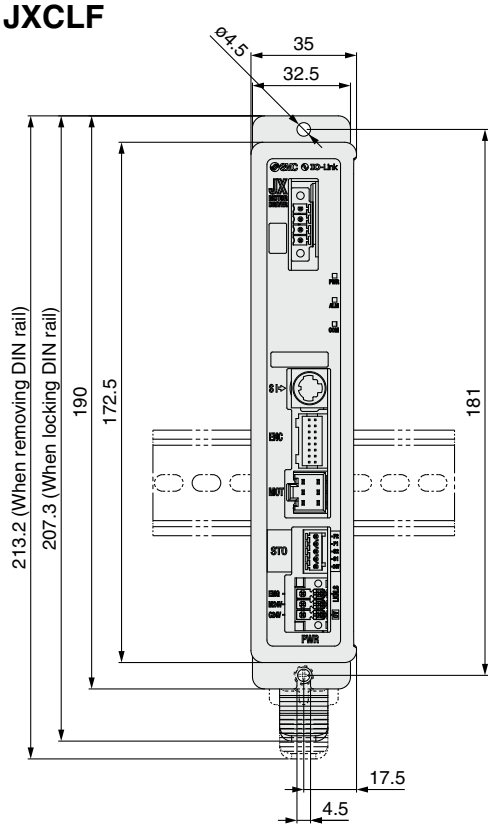

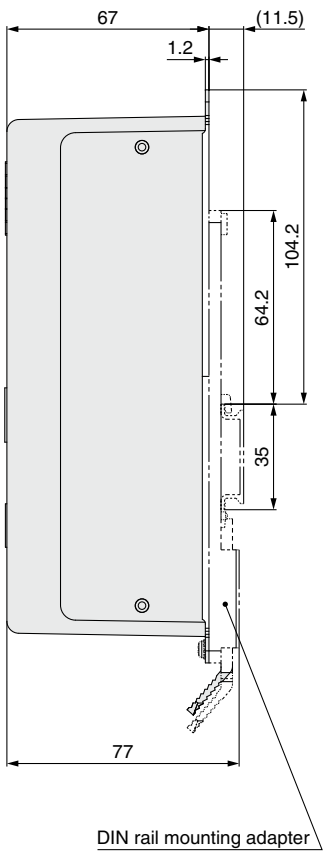

JXC9F

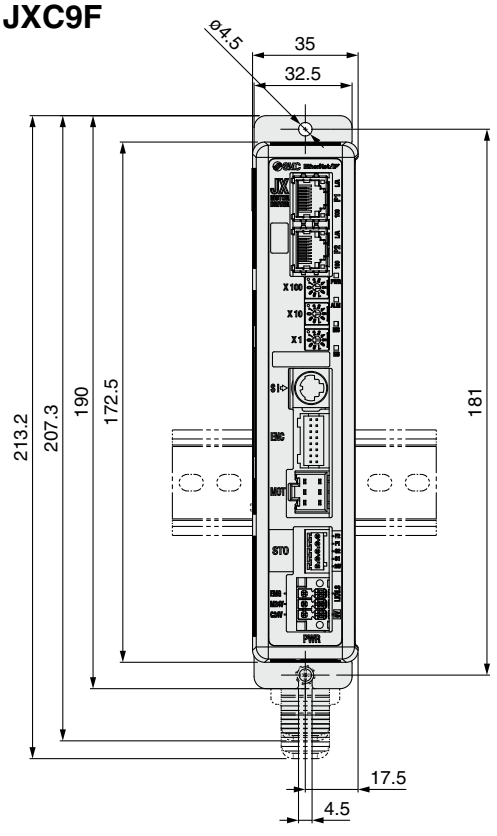

JXCPF

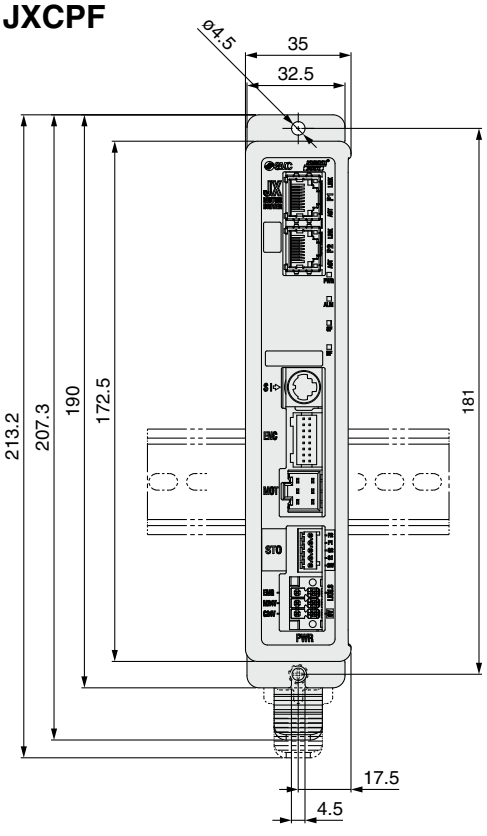

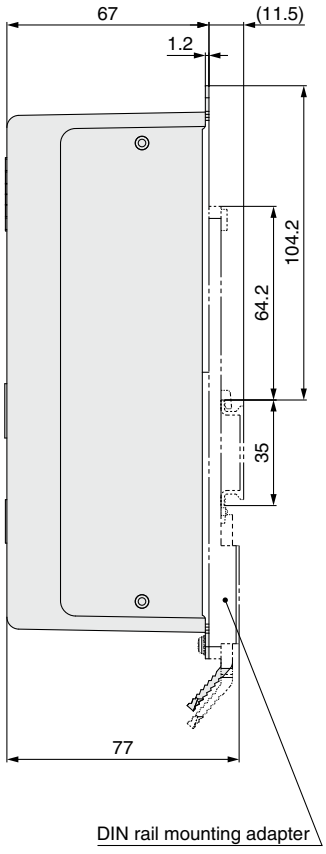

Options

■ Communication cable for controller setting

① **Communication cable JXC-W2A-C**

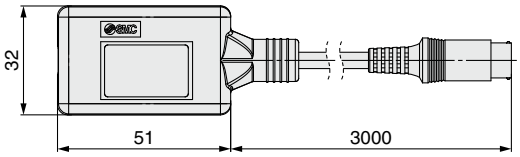

∗ It can be connected to the controller directly.

② **USB cable LEC-W2-U**

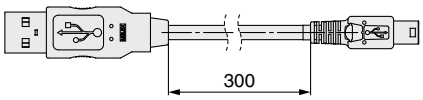

③ **Controller setting kit JXC-W2A**

A set which includes a communication cable (JXC-W2A-C) and a USB cable (LEC-W2-U)

<Controller setting software/USB driver>
· Controller setting software
· USB driver (For JXC-W2A-C)
Download from SMC's website: https://www.smcworld.com

Hardware Requirements

OS	Windows®7, Windows®8.1, Windows®10, Windows®11
Communication interface	USB 1.1 or USB 2.0 ports
Display	1024 x 768 or more

∗ Windows®7, Windows®8.1, Windows®10, and Windows®11 are registered trademarks of Microsoft Corporation in the United States.

■ Conversion cable P5062-5 (Cable length: 300 mm)

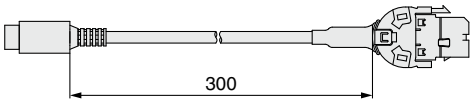

∗ To connect the teaching box (LEC-T1-3□G□) or communication cable for controller setting (LEC-W2A-C) to the controller, a conversion cable is required.

■ DIN rail mounting adapter LEC-3-D0

∗ With 2 mounting screws

This should be used when the DIN rail mounting adapter is mounted onto a screw mounting type controller afterward.

■ DIN rail AXT100-DR-□

∗ For □, enter a number from the No. line in the table on page 90. Refer to the dimension drawings on pages 88 to 90 for the mounting dimensions.

■ Teaching box

LEC − T1 − 3 J G □

Teaching box

Cable length [m]

3	3

Initial language

J	Japanese
E	English

∗ The displayed language can be changed to English or Japanese.

Stop switch

G	Equipped with stop switch

Enable switch

Nil	None
S	Equipped with enable switch

∗ Interlock switch for jog and test function

Specifications

Item	Description
Switch	Stop switch, Enable switch (Option)
Cable length [m]	3
Enclosure	IP64 (Except connector)
Operating temperature range [°C]	5 to 50
Operating humidity range [%RH]	90 or less (No condensation)
Weight [g]	350 (Except cable)

Options

■ Power supply plug JXC-CPW

∗ The power supply plug is an accessory.

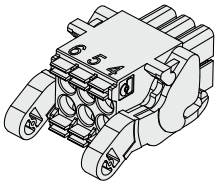

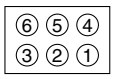

① C24V ④ 0V
② M24V ⑤ N.C.
③ EMG ⑥ LK RLS

Power supply plug

Terminal name	Function	Details
0V	Common supply (–)	The M24V terminal, C24V terminal, EMG terminal, and LK RLS terminal are common (–).
M24V	Motor power supply (+)	Motor power supply (+) of the controller
C24V	Control power supply (+)	Control power supply (+) of the controller
EMG	Stop (+)	Connection terminal of the external stop circuit
LK RLS	Lock release (+)	Connection terminal of the lock release switch

■ STO signal plug JXC-CSTO

STO signal plug

Pin no.	Signal name	Details
1	24V	+24 V output (Max. 100 mA)
2	STO1	STO input 1
3	STO2	STO input 2
4	Feedback 1	STO1 feedback signal
5	Feedback 2	STO2 feedback signal

■ Communication plug connector

For DeviceNet®

Straight type JXC-CD-S

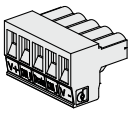

T-branch type JXC-CD-T

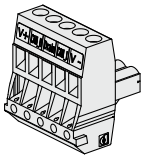

Communication plug connector for DeviceNet®

Terminal name	Details
V+	Power supply (+) for DeviceNet®
CAN_H	Communication wire (High)
Drain	Grounding wire/Shielded wire
CAN_L	Communication wire (Low)
V–	Power supply (–) for DeviceNet®

For IO-Link

Straight type JXC-CL-S

∗ The communication plug connector for IO-Link is an accessory.

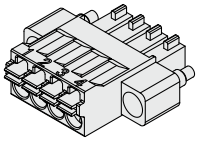

Communication plug connector for IO-Link

Terminal no.	Terminal name	Details
1	L+	+24 V
2	NC	N/A
3	L–	0 V
4	C/Q	IO-Link signal

For CC-Link

Straight type LEC-CMJ-S

T-branch type LEC-CMJ-T

Communication plug connector for CC-Link

Terminal name	Details
DA	CC-Link communication line A
DB	CC-Link communication line B
DG	CC-Link ground line
SLD	CC-Link shield
FG	Frame ground

Actuator Cable (Option)

[Robotic cable for battery-less absolute (Step motor 24 VDC)]

LE − CE − 1

Cable length (L) [m]

1	1.5
3	3
5	5
8	8*1
A	10*1
B	15*1
C	20*1

*1 Produced upon receipt of order

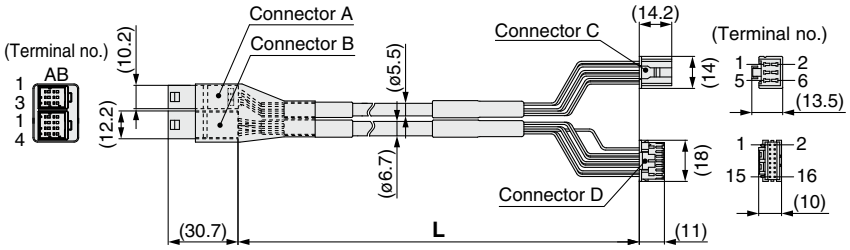

Weight

Product no.	Weight [g]	Note
LE-CE-1	190	Robotic cable
LE-CE-3	360	
LE-CE-5	570	
LE-CE-8	900	
LE-CE-A	1120	
LE-CE-B	1680	
LE-CE-C	2210	

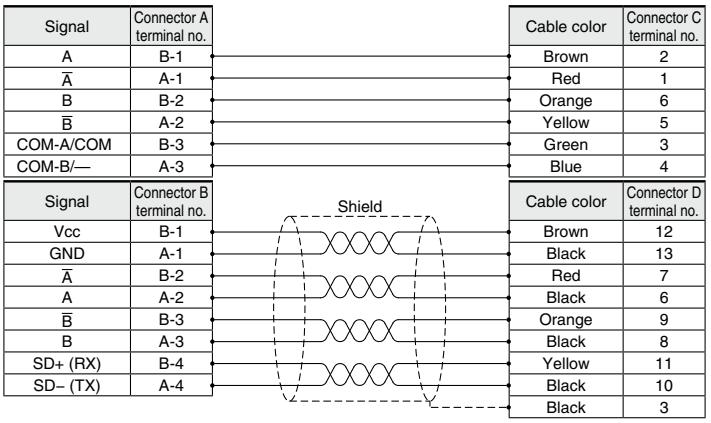

Signal	Connector A terminal no.	Cable color	Connector C terminal no.
A	B-1	Brown	2
$\overline{A}$	A-1	Red	1
B	B-2	Orange	6
$\overline{B}$	A-2	Yellow	5
COM-A/COM	B-3	Green	3
COM-B/—	A-3	Blue	4

Signal	Connector B terminal no.	Cable color	Connector D terminal no.
Vcc	B-1	Brown	12
GND	A-1	Black	13
$\overline{A}$	B-2	Red	7
A	A-2	Black	6
$\overline{B}$	B-3	Orange	9
B	A-3	Black	8
SD+ (RX)	B-4	Yellow	11
SD− (TX)	A-4	Black	10
		Black	3

[Robotic cable with lock for battery-less absolute (Step motor 24 VDC)]

LE − CE − 1 − B

Cable length (L) [m]

1	1.5
3	3
5	5
8	8*1
A	10*1
B	15*1
C	20*1

*1 Produced upon receipt of order

With lock and sensor

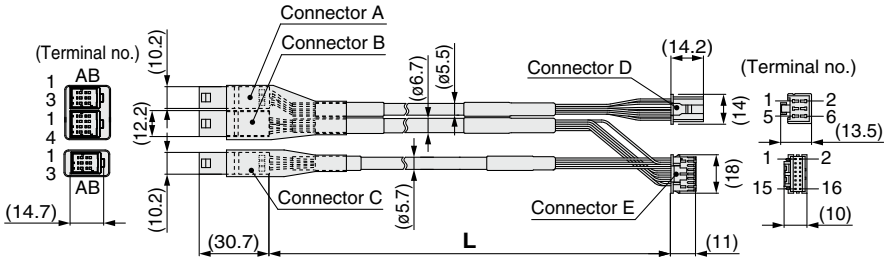

Weight

Product no.	Weight [g]	Note
LE-CE-1-B	240	Robotic cable
LE-CE-3-B	460	
LE-CE-5-B	740	
LE-CE-8-B	1170	
LE-CE-A-B	1460	
LE-CE-B-B	2120	
LE-CE-C-B	2890	

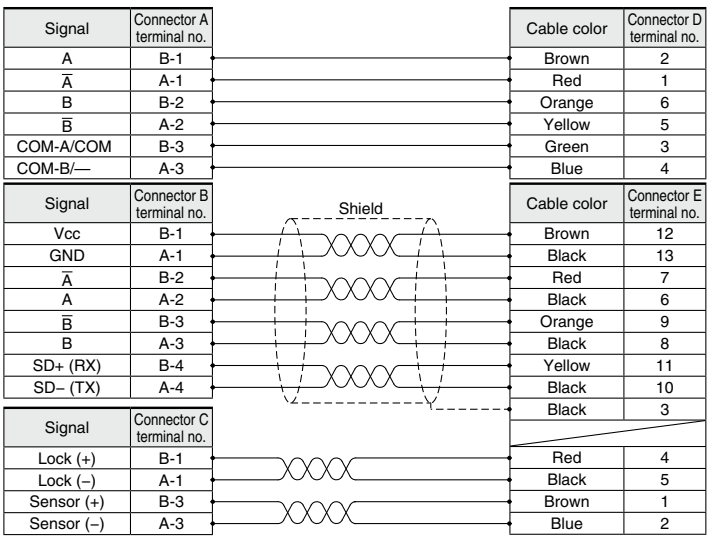

Signal	Connector A terminal no.	Cable color	Connector D terminal no.
A	B-1	Brown	2
$\overline{A}$	A-1	Red	1
B	B-2	Orange	6
$\overline{B}$	A-2	Yellow	5
COM-A/COM	B-3	Green	3
COM-B/—	A-3	Blue	4

Signal	Connector B terminal no.	Cable color	Connector E terminal no.
Vcc	B-1	Brown	12
GND	A-1	Black	13
$\overline{A}$	B-2	Red	7
A	A-2	Black	6
$\overline{B}$	B-3	Orange	9
B	A-3	Black	8
SD+ (RX)	B-4	Yellow	11
SD− (TX)	A-4	Black	10
		Black	3

Signal	Connector C terminal no.		
Lock (+)	B-1	Red	4
Lock (−)	A-1	Black	5
Sensor (+)	B-3	Brown	1
Sensor (−)	A-3	Blue	2

JXC51/61/E□/9□/P□/D1/L□/M1 Series
Precautions Relating to Differences in Controller Versions

As the controller version of the JXC series differs, the internal parameters are not compatible.

■ If using the JXC□1□-BC, please use the latest version of the JXC-BCW (parameter writing tool).

■ There are currently 3 versions available: version 1 products (V1.□ or S1.□), version 2 products (V2.□ or S2.□), and version 3 products (V3.□ or S3.□). Keep in mind that in order to write a backup file (.bkp) to another controller with the JXC-BCW, it needs to be the same version as the controller that created the file. (For example, a backup file created by a version 1 product can only be written to another version 1 product, and so on.)

Identifying Version Symbols

JXC□□ Series Version V3.□ or S3.□ Products

XR V3.0

Applicable models

JXC9□□ Series

XR S3.0 T1.0

Applicable models

JXC51□ Series
JXC61□ Series
JXCE□□ Series
JXCP□□ Series
JXCD1□ Series
JXCL□□ Series
JXCM1□ Series

JXC□□ Series Version V2.□ or S2.□ Products

WP V2.1

Applicable models

JXC9□□ Series

WP S2.2 T1.1

Applicable models

JXCE□□ Series
JXCP□□ Series
JXCD1□ Series
JXCL□□ Series

JXC□□ Series Version V1.□ or S1.□ Products

XR V1.0

Applicable models

JXC9□□ Series

XR S1.0 T1.0

Applicable models

JXCE□□ Series
JXCP□□ Series
JXCD1□ Series
JXCL□□ Series

Blank Controller Versions and Applicable Actuator Sizes

■ The applicable electric actuator size range differs depending on the controller version.
Be sure to confirm the controller version before using a blank controller.

Blank Controller Versions/Applicable Electric Actuator Sizes

Blank controller		Applicable electric actuator size										
Series	Controller version	LEFS□E	LEFB□E	LEKFS□E	LEY□E	LEY□E-X8	LEYG□E	LES□E	LESH□E	LESYH□E	LER□E	LEHF□E
JXC91□ series JXCD1□ series JXCE1□ series JXCP1□ series JXCL1□ series	Version 3.4 (V3.4, S3.4) Version 3.5 (V3.5, S3.5)	25, 32, 40	25, 32, 40	25, 32, 40	25, 32, 40	25, 32, 40	25, 32, 40	25	25	16, 25	50	32, 40
	Version 3.6 (V3.6, S3.6) or higher	16, 25, 32, 40	16, 25, 32, 40	16, 25, 32, 40	16, 25, 32, 40		16, 25, 32, 40			8, 16, 25		
JXCM1□ series JXC51/61 series	Version 3.4 (V3.4, S3.4)	25, 32, 40	25, 32, 40	25, 32, 40	25, 32, 40		25, 32, 40			16, 25		
	Version 3.5 (V3.5, S3.5) or higher	16, 25, 32, 40	16, 25, 32, 40	16, 25, 32, 40	16, 25, 32, 40		16, 25, 32, 40			8, 16, 25		
JXC□F series	All versions											

AC Servo Motor Drivers
LECSA/LECS□-T/LECY□ Series

CE UKCA
* For details, refer to page 128.
c UL us LISTED
* Excludes the LECYM/LECYU
RoHS

Pulse Input Type/Positioning Type ..... p. 97

Incremental Type/LECSA Series

c UL us LISTED

Pulse Input Type/Positioning Type ..... p. 97

Absolute Type/LECSB-T Series

c UL us LISTED

With STO sub-function

CC-Link Direct Input Type ..... p. 97

Absolute Type/LECSC-T Series

CC-Link

c UL us LISTED

SSCNETⅢ/H Type ..... p. 97

Absolute Type/LECSS-T Series

SSCNETⅢ/H SERVO SYSTEM CONTROLLER NETWORK

e-F@ctory Alliance

c UL us LISTED

With STO sub-function

MECHATROLINK-Ⅱ Type ..... p. 116

Absolute Type/LECYM Series

MECHATROLINK-Ⅱ

With STO sub-function

MECHATROLINK-Ⅲ Type ..... p. 116

Absolute Type/LECYU Series

MECHATROLINK-Ⅲ

With STO sub-function

● **Specific Product Precautions** p. 126

AC Servo Motor Driver
Incremental Type
LECSA Series **(Pulse Input Type/Positioning Type)**

* For details, refer to page 128.

Absolute Type
LECSB-T **(Pulse Input Type/Positioning Type)*****/LECSC-T*** **(CC-Link Direct Input Type)**
LECSS-T **(SSCNET Ⅲ/H Type)** ***Series***

How to Order

For LECSA

LECS A 1 – S1

Driver type

A	Pulse input type/Positioning type (For incremental encoder)

Power supply voltage

1	100 to 120 VAC, 50/60 Hz
2	200 to 230 VAC, 50/60 Hz

LECSA

* **If an I/O connector is required, order the part number "LE-CSN□" separately.**
* **If an I/O cable is required, order the part number "LEC-CSN□-1" separately.**

Compatible motor type

Symbol	Type	Capacity	Encoder
S1	AC servo motor (S2*1)	100 W	Incremental
S3	AC servo motor (S3*1)	200 W	

*1 The symbol shows the motor type (actuator).

For LECSB-T/LECSC-T/LECSS-T

LECS B 2 – T5

Driver type

B	Pulse input type/Positioning type (For absolute encoder)
C	CC-Link direct input type (For absolute encoder)
S	SSCNET Ⅲ/H type (For absolute encoder)

Power supply voltage

2	200 to 240 VAC, 50/60 Hz (For LECSB2-T/LECSS2-T)
	200 to 230 VAC, 50/60 Hz (For LECSC2-T)

LECSB-T LECSC-T LECSS-T

* **If an I/O connector is required, order the part number "LE-CSN□" separately.**
* **If an I/O cable is required, order the part number "LEC-CSN□-1" separately.**

(Since the electric actuator will not operate without forced stop (EM2) wiring when using the LECSB-T in any mode other than positioning mode, an I/O connector or an I/O cable is required.)

Compatible motor type

Symbol	Type	Capacity	Encoder
T5	AC servo motor (T6*1)	100 W	Absolute
T7	AC servo motor (T7*1)	200 W	
T8	AC servo motor (T8*1)	400 W	

*1 The symbol shows the motor type (actuator).

Dimensions

LECSA□

For LECSA□-S1, S3

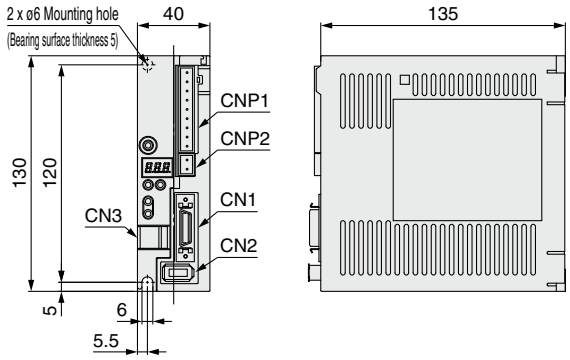

Connector name	Description
CN1	I/O signal connector
CN2	Encoder connector
CN3	USB communication connector
CNP1	Main circuit power supply connector
CNP2	Control circuit power supply connector

LECSB2-T□

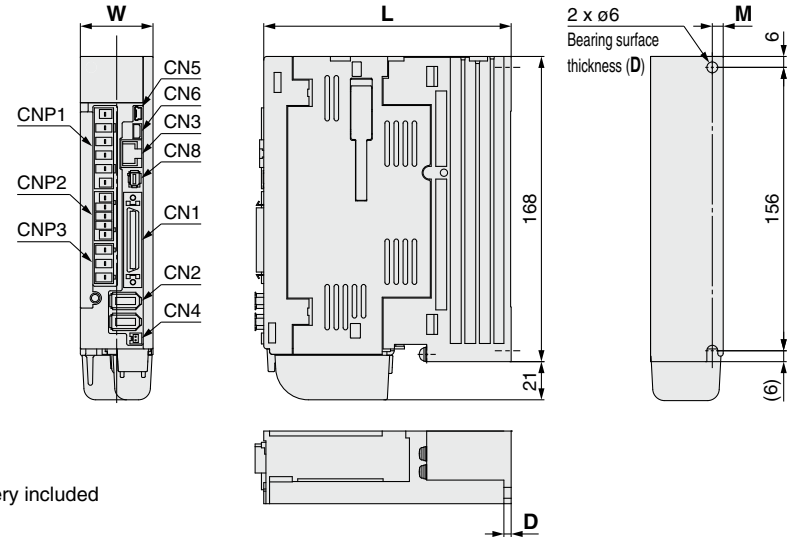

∗ Battery included

Connector name	Description
CN1	I/O signal connector
CN2	Encoder connector
CN3	RS-422 communication connector
CN4	Battery connector
CN5	USB communication connector
CN6	Analog monitor connector
CN8	STO input signal connector
CNP1	Main circuit power supply connector
CNP2	Control circuit power supply connector
CNP3	Servo motor power connector

Dimensions [mm]

Model	W	L	D	M
LECSB2-T5	40	135	4	6
LECSB2-T7				

Dimensions

LECSC2-T□

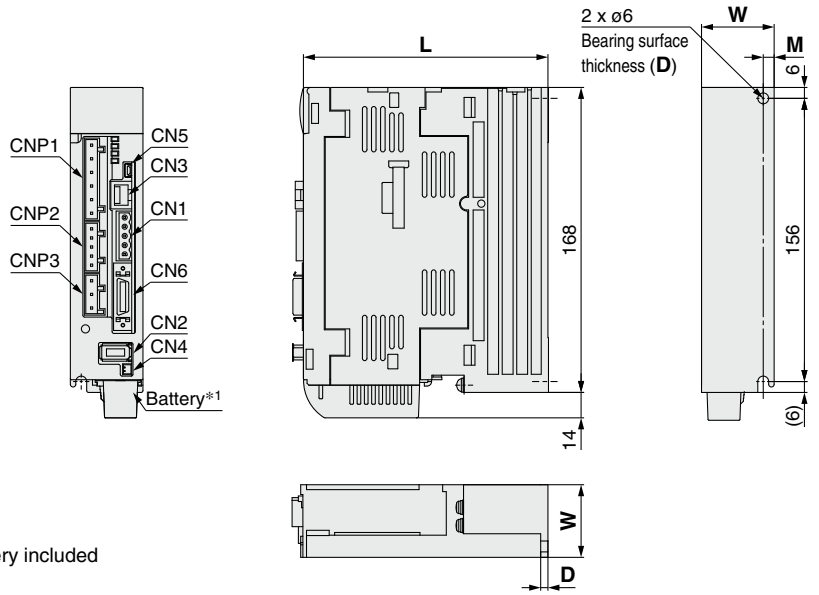

*1 Battery included

Connector name	Description
CN1	CC-Link connector
CN2	Encoder connector
CN3	RS-422 communication connector
CN4	Battery connector
CN5	USB communication connector
CN6	I/O signal connector
CNP1	Main circuit power supply connector
CNP2	Control circuit power supply connector
CNP3	Servo motor power connector

Dimensions [mm]

Model	W	L	D	M
LECSC2-T5	40	135	4	6
LECSC2-T7				

LECSS2-T□

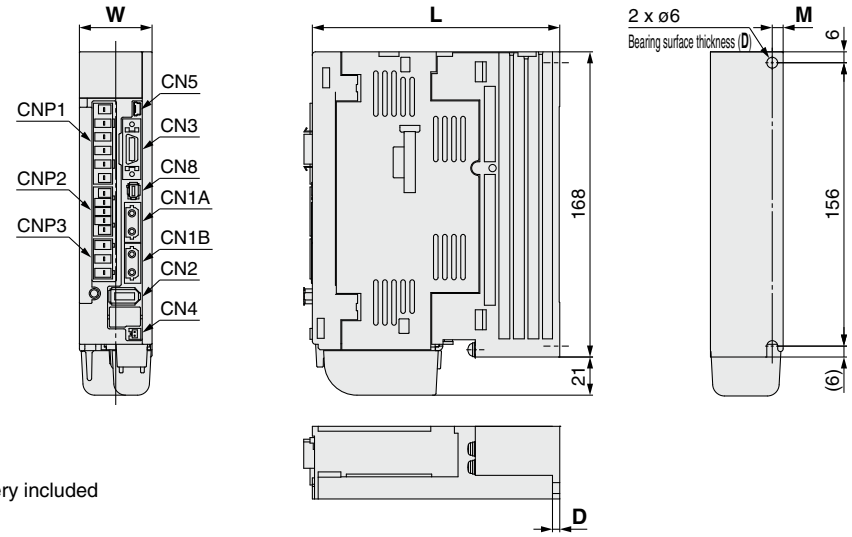

* Battery included

Connector name	Description
CN1A	Front axis connector for SSCNET Ⅲ/H
CN1B	Rear axis connector for SSCNET Ⅲ/H
CN2	Encoder connector
CN3	I/O signal connector
CN4	Battery connector
CN5	USB communication connector
CN8	STO input signal connector
CNP1	Main circuit power supply connector
CNP2	Control circuit power supply connector
CNP3	Servo motor power connector

Dimensions [mm]

Model	W	L	D	M
LECSS2-T5	40	135	4	6
LECSS2-T7				

Specifications

LECSA Series

Model		LECSA1-S1	LECSA1-S3	LECSA2-S1	LECSA2-S3
Rated power supply capacity [kVA]		0.3	0.5	0.3	0.5
Max. power supply capacity [kVA]		0.9	1.5	0.9	1.5
Compatible motor capacity [W]		100	200	100	200
Compatible encoder		Incremental 17-bit encoder (Resolution: 131072 p/rev)			
Main power supply	**Power voltage [V]**	Single phase 100 to 120 VAC (50/60 Hz)		Single phase 200 to 230 VAC (50/60 Hz)	
	Allowable voltage fluctuation [V]	Single phase 85 to 132 VAC		Single phase 170 to 253 VAC	
	Rated current [A]	3.0	5.0	1.5	2.4
Control power supply	**Control power supply voltage [V]**	24 VDC			
	Allowable voltage fluctuation [V]	21.6 to 26.4 VDC			
	Rated current [A]	0.5			
Parallel input		6 inputs			
Parallel output		4 outputs			
Max. input pulse frequency [pps]		1 M (for differential receiver), 200 k (for open collector)*2			
Function	**In-position range setting [pulse]**	0 to ±65535 (Command pulse unit)			
	Error excessive	±3 rotations			
	Torque limit	Parameter setting			
	Communication	USB communication			
	Point table	Up to 7 points			
Operating temperature range [°C]		0 to 55 (No freezing)			
Operating humidity range [%RH]		90 or less (No condensation)			
Storage temperature range [°C]		–20 to 65 (No freezing)			
Storage humidity range [%RH]		90 or less (No condensation)			
Enclosure		IP20			
Insulation resistance [MΩ]		Between the housing and SG: 10 (500 VDC)			
Weight [g]		600			

LECSB-T Series

Model		LECSB2-T5	LECSB2-T7
Rated power supply capacity [kVA]		0.3	0.5
Max. power supply capacity [kVA]		1.05	1.75
Compatible motor capacity [W]		100	200
Compatible encoder		Absolute 22-bit encoder (Resolution: 4194304 p/rev)	
Main power supply	**Power voltage [V]***3	Three phase 200 to 240 VAC (50/60 Hz), Single phase 200 to 240 VAC (50/60 Hz)	
	Allowable voltage fluctuation [V]*3	Three phase 170 to 264 VAC (50/60 Hz), Single phase 170 to 264 VAC (50/60 Hz)	
	Rated current [A]	0.9	1.5
Control power supply	**Control power supply voltage [V]**	Single phase 200 to 240 VAC (50/60 Hz)	
	Allowable voltage fluctuation [V]	Single phase 170 to 264 VAC	
	Rated current [A]	0.2	
Parallel input		10 inputs	
Parallel output		6 outputs	
Max. input pulse frequency [pps]		4 M (for differential receiver), 200 k (for open collector)	
Function	**In-position range setting [pulse]**	0 to ±65535 (Command pulse unit)	
	Error excessive	±3 rotations	
	Torque limit	Parameter setting or external analog input setting (0 to 10 VDC)	
	Communication	USB communication, RS422 communication*1	
	Point table	Up to 255 points	
	Pushing operation	Point table no. input method, Up to 127 points	
Operating temperature range [°C]		0 to 55 (No freezing)	
Operating humidity range [%RH]		90 or less (No condensation)	
Storage temperature range [°C]		–20 to 65 (No freezing)	
Storage humidity range [%RH]		90 or less (No condensation)	
Enclosure		IP20	
Insulation resistance [MΩ]		Between the housing and SG: 10 (500 VDC)	
Safety function		STO (IEC/EN 61800-5-2)	
Safety standards*2		EN ISO 13849-1 Category 3 PL e, IEC 61508 SIL 3, EN 62061 SIL CL3, EN 61800-5-2	
Weight [g]		800	

*1 USB communication and RS422 communication cannot be performed at the same time.
*2 The safety level depends on the set value of the driver parameter [Pr. PF18 STO diagnosis error detection time] and whether STO input diagnosis by TOFB output is performed or not. Refer to the LECSB-T operation manual for details.
*3 Three phase 400 VAC is not supported.

Specifications

LECSC-T Series

Model			LECSC2-T5	LECSC2-T7
Rated power supply capacity [kVA]			0.3	0.5
Max. power supply capacity [kVA]			1.05	1.75
Compatible motor capacity [W]			100	200
Compatible encoder			Absolute 18-bit encoder (Resolution: 262144 p/rev)	
Main power supply	Power voltage [V]*3		Three phase 200 to 230 VAC (50/60 Hz), Single phase 200 to 230 VAC (50/60 Hz)	
	Allowable voltage fluctuation [V]*3		Three phase 170 to 253 VAC, Single phase 170 to 253 VAC	
	Rated current [A]		0.9	1.5
Control power supply	Control power supply voltage [V]		Single phase 200 to 230 VAC (50/60 Hz)	
	Allowable voltage fluctuation [V]		Single phase 170 to 253 VAC	
	Rated current [A]		0.2	
Communication specifications	Applicable Fieldbus protocol (Version)		CC-Link communication (Ver. 1.10)	
	Connection cable		CC-Link Ver. 1.10 compliant cable (Shielded 3-core twisted pair cable)*1	
	Remote station number		1 to 64	
	Cable length	Communication speed [bps]/ Maximum overall cable length [m]	16 k/1200, 625 k/900, 2.5 M/400, 5 M/160, 10 M/100	
		Cable length between stations [m]	0.2 or more	
	I/O occupation area (Inputs/Outputs)		1 station occupied (Remote I/O 32 points/32 points)/(Remote register 4 words/4 words) 2 stations occupied (Remote I/O 64 points/64 points)/(Remote register 8 words/8 words)	
	Number of connectable drivers		Up to 42 (when 1 station is occupied by 1 driver), Up to 32 (when 2 stations are occupied by 1 driver), when there are only remote device stations.	
Command method	Remote register input		Available with CC-Link communication (2 stations occupied)	
	Point table No. input		Available with CC-Link communication, RS422 communication CC-Link communication (1 station occupied): 31 points, CC-Link communication (2 stations occupied): 255 points RS422 communication: 255 points	
	Indexer positioning input		Available with CC-Link communication CC-Link communication (1 station occupied): 31 points, CC-Link communication (2 stations occupied): 255 points	
Communication function			USB communication, RS-422 communication*2	
Operating temperature range [°C]			0 to 55 (No freezing)	
Operating humidity range [%RH]			90 or less (No condensation)	
Storage temperature range [°C]			–20 to 65 (No freezing)	
Storage humidity range [%RH]			90 or less (No condensation)	
Enclosure			IP00	
Insulation resistance [MΩ]			Between the housing and SG: 10 (500 VDC)	
Weight [g]			800	

*1 If the system comprises of both CC-Link Ver. 1.00 and Ver. 1.10 compliant cables, Ver. 1.00 specifications are applied to the overall cable length and the cable length between stations.
*2 USB communication and RS422 communication cannot be performed at the same time.
*3 Three phase 400 VAC is not supported.

LECSS-T Series

Model		LECSS2-T5	LECSS2-T7
Rated power supply capacity [kVA]		0.3	0.5
Max. power supply capacity [kVA]		1.05	1.75
Compatible motor capacity [W]		100	200
Compatible encoder		Absolute 22-bit encoder (Resolution: 4194304 p/rev)	
Main power supply	Power voltage [V]*2	Three phase 200 to 240 VAC (50/60 Hz), Single phase 200 to 240 VAC (50/60 Hz)	
	Allowable voltage fluctuation [V]*2	Three phase 170 to 264 VAC (50/60 Hz), Single phase 170 to 264 VAC (50/60 Hz)	
	Rated current [A]	0.9	1.5
Control power supply	Control power supply voltage [V]	Single phase 200 to 240 VAC (50/60 Hz)	
	Allowable voltage fluctuation [V]	Single phase 170 to 264 VAC	
	Rated current [A]	0.2	
Applicable Fieldbus protocol		SSCNET Ⅲ/H (High-speed optical communication)	
Communication function		USB communication	
Operating temperature range [°C]		0 to 55 (No freezing)	
Operating humidity range [%RH]		90 or less (No condensation)	
Storage temperature range [°C]		–20 to 65 (No freezing)	
Storage humidity range [%RH]		90 or less (No condensation)	
Enclosure		IP20	
Insulation resistance [MΩ]		Between the housing and SG: 10 (500 VDC)	
Safety function		STO (IEC/EN 61800-5-2)	
Safety standards*1		EN ISO 13849-1 Category 3 PL d, EN 61508 SIL 2, EN 62061 SIL CL2, EN 61800-5-2	
Weight [g]		800	

*1 Refer to the LECSS-T operation manual for details.
*2 Three phase 400 VAC is not supported.

Power Supply Wiring Example: LECSA

LECSA□-□

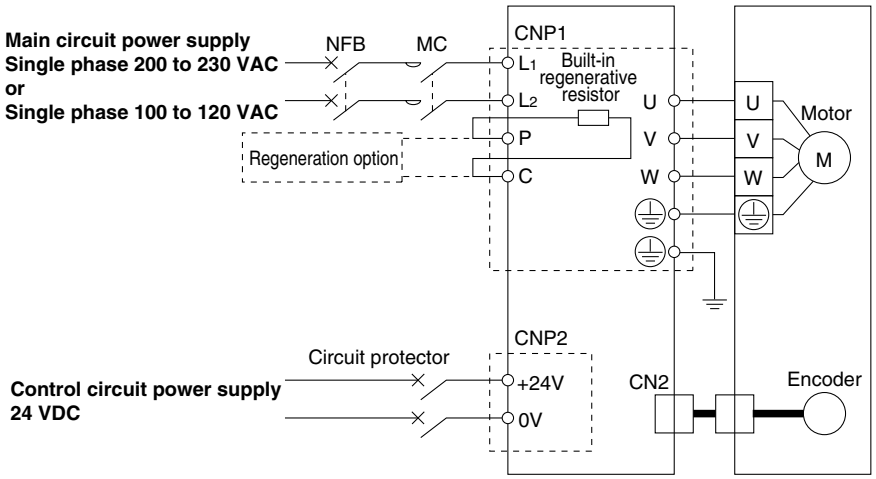

Main Circuit Power Supply Connector: CNP1

∗ Accessory

Terminal name	Function	Details
⏚	Protective earth (PE)	Should be grounded by connecting the servo motor's earth terminal and the control panel's protective earth (PE)
L_1	Main circuit power supply	Connect the main circuit power supply. LECSA1: Single phase 100 to 120 VAC, 50/60 Hz LECSA2: Single phase 200 to 230 VAC, 50/60 Hz
L_2		
P	Regeneration option	Terminal to connect regeneration option LECSA□-S1: Not connected at time of shipping LECSA□-S3, S4: Connected at time of shipping ∗ If regeneration option is required for "Model Selection," connect to this terminal.
C		
U	Servo motor power (U)	Connect to motor cable (U, V, W).
V	Servo motor power (V)	
W	Servo motor power (W)	

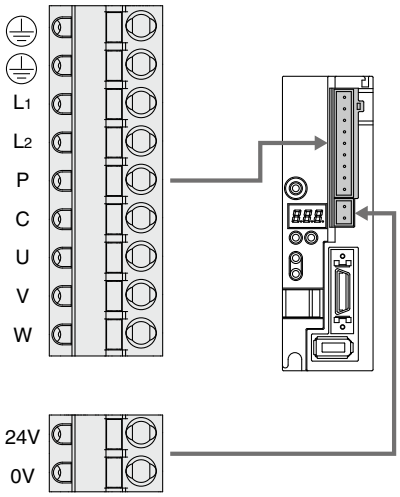

Control Circuit Power Supply Connector: CNP2

∗ Accessory

Terminal name	Function	Details
24V	Control circuit power supply (24 V)	24 V side of the control circuit power supply (24 VDC) supplied to the driver
0V	Control circuit power supply (0 V)	0 V side of the control circuit power supply (24 VDC) supplied to the driver

Power Supply Wiring Example: LECSB2-T□, LECSS2-T□

For single phase 200 VAC

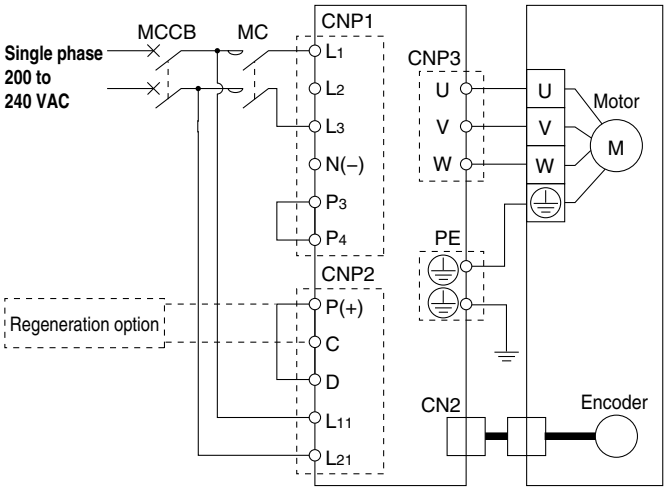

For three phase 200 VAC

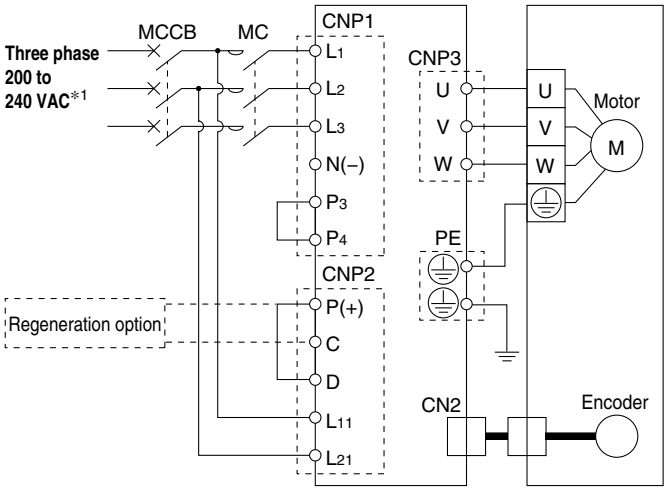

*1 Three phase 400 VAC is not supported.

* For single phase 200 to 240 VAC, power supply should be connected to L_1 and L_3 terminals, with nothing connected to L_2.

Main Circuit Power Supply Connector: CNP1

* Accessory

Terminal name	Function	Details
L_1	Main circuit power supply	Connect the main circuit power supply. LECSB2-T/LECSS2-T: Single phase 200 to 240 VAC, 50/60 Hz Connection terminal: L_1, L_3 Three phase 200 to 240 VAC, 50/60 Hz Connection terminal: L_1, L_2, L_3
L_2		
L_3		
N(–)	Do not connect.	
P_3	Connect between P_3 and P_4. (Connected at time of shipping)	
P_4		

Control Circuit Power Supply Connector: CNP2

* Accessory

Terminal name	Function	Details
P(+)	Regeneration option	Connect between P(+) and D. (Connected at time of shipping) * If regeneration option is required for "Model Selection," connect to this terminal.
C		
D		
L_{11}	Control circuit power supply	Connect the control circuit power supply. LECSB2-T/LECSS2-T: Single phase 200 to 240 VAC, 50/60 Hz Connection terminal: L_{11}, L_{21}
L_{21}		

Motor Connector: CNP3

* Accessory

Terminal name	Function	Details
U	Servo motor power (U)	Connect to motor cable (U, V, W).
V	Servo motor power (V)	
W	Servo motor power (W)	

LECSS2-T□ Front view example

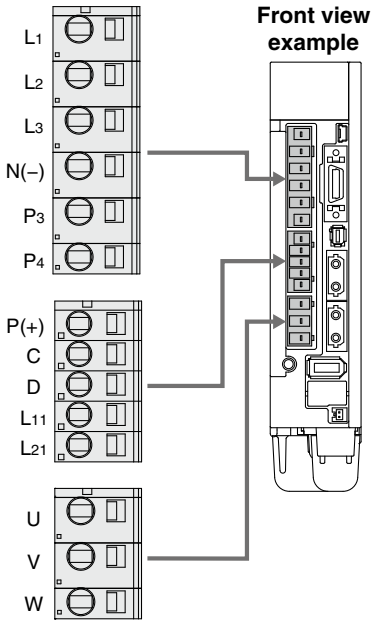

Power Supply Wiring Example: LECSC2-T□

For single phase 200 VAC

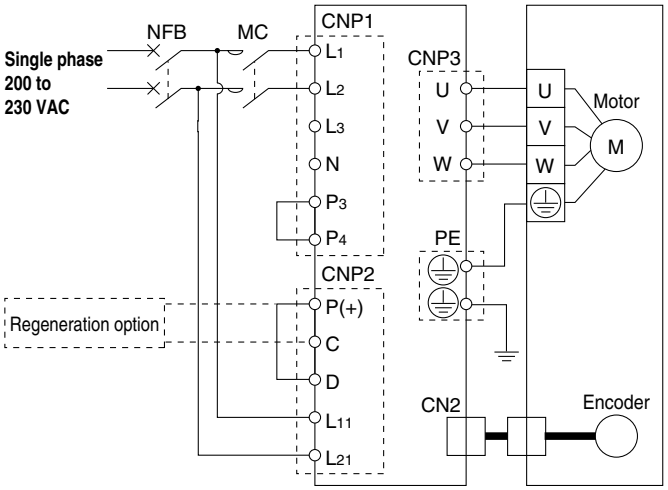

For three phase 200 VAC

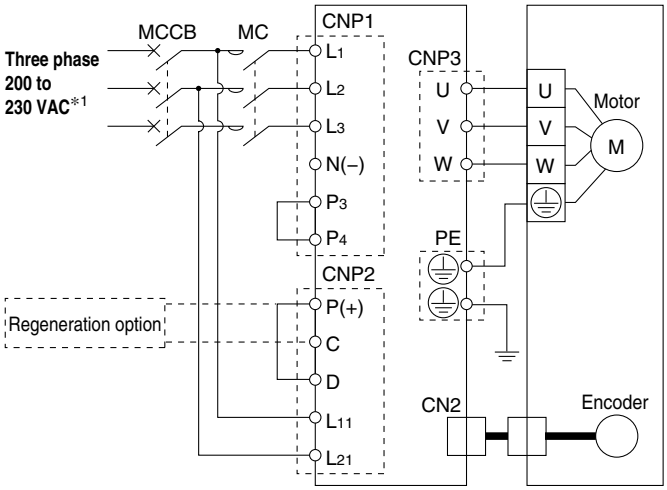

*1 Three phase 400 VAC is not supported.
* For single phase 200 to 230 VAC, power supply should be connected to L_1 and L_2 terminals, with nothing connected to L_3.

Main Circuit Power Supply Connector: CNP1

* Accessory

Terminal name	Function	Details
L_1	Main circuit power supply	Connect the main circuit power supply. LECSC2-T: Single phase 200 to 230 VAC, 50/60 Hz Connection terminal: L_1, L_2 Three phase 200 to 230 VAC, 50/60 Hz Connection terminal: L_1, L_2, L_3
L_2		
L_3		
N	Do not connect.	
P_3	Connect between P_3 and P_4. (Connected at time of shipping)	
P_4		

Control Circuit Power Supply Connector: CNP2

* Accessory

Terminal name	Function	Details
P(+)	Regeneration option	Connect between P and D. (Connected at time of shipping) * If regeneration option is required for "Model Selection," connect to this terminal.
C		
D		
L_{11}	Control circuit power supply	Connect the control circuit power supply. LECSC2-T: Single phase 200 to 230 VAC, 50/60 Hz Connection terminal: L_{11}, L_{21}
L_{21}		

Motor Connector: CNP3

* Accessory

Terminal name	Function	Details
U	Servo motor power (U)	Connect to motor cable (U, V, W).
V	Servo motor power (V)	
W	Servo motor power (W)	

LECSC2-T Front view example

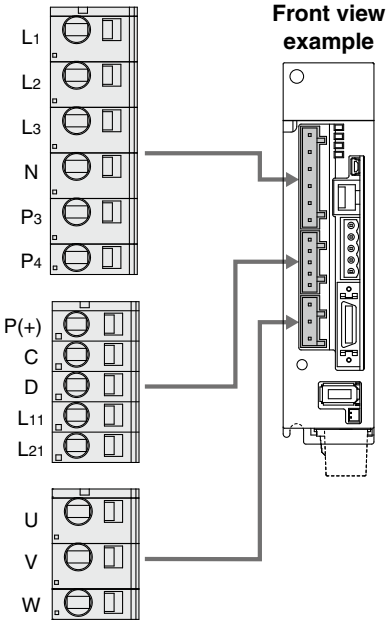

Control Signal Wiring Example: LECSA

LECSA□-□

This wiring example shows connection with a PLC (FX3U-□□MT/ES) manufactured by Mitsubishi Electric Corporation as when used in position control mode. Refer to the LECSA series Operation Manual and any technical literature or operation manuals for your PLC and positioning unit before connecting to another PLC or positioning unit.

Position control mode

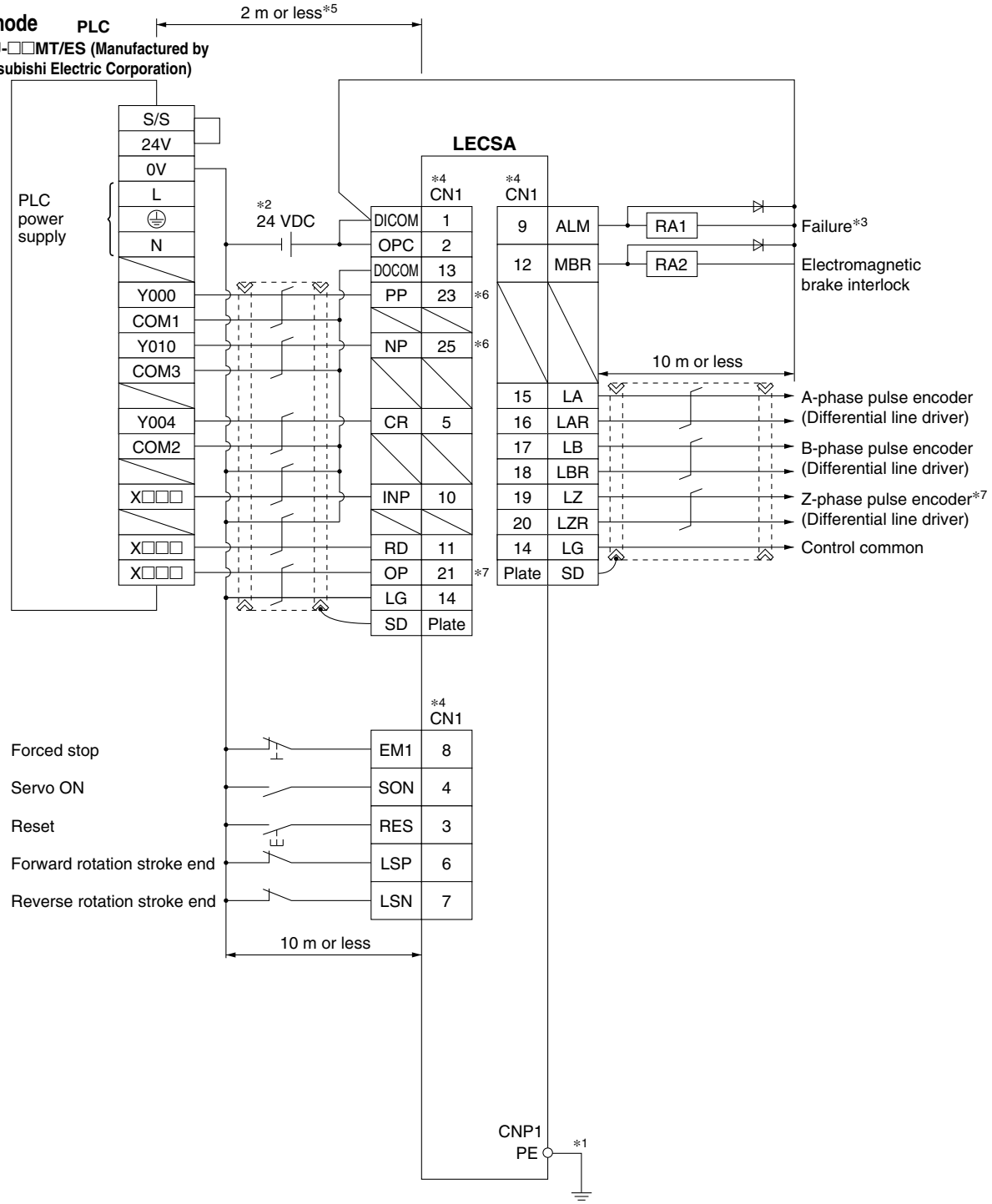

*1 For preventing electric shock, be sure to connect the driver main circuit power supply connector (CNP1)'s protective earth (PE) terminal (marked ⏚) to the control panel's protective earth (PE).

*2 For interface use, supply 24 VDC ±10% 200 mA using an external source. 200 mA is the value when all I/O command signals are being used. In addition, reducing the number of inputs/outputs can decrease the current capacity. Refer to the Operation Manual for required current for interface.

*3 The failure (ALM) is normally ON. When it is OFF (alarm occurs), stop the PLC signal using the sequence program.

*4 Signals of the same name are connected inside the driver.

*5 For command pulse input with an open collector method. When a positioning unit loaded with a differential line driver method is used, it is 10 m or less.

*6 If the command pulse input is open collector method, it supports only the sink (NPN) type interface. It does not correspond to the source (PNP) type interface.

*7 The Z-phase pulse encoder corresponds to the differential line driver method and the open collector method. If the Z-phase pulse encoder is using the open collector method, it supports only the sink (NPN) type interface. It does not correspond to the source (PNP) type interface.

Control Signal Wiring Example: LECSA

In this wiring example, the device of the CN1-10 pin in the initial status has been changed to the device shown below. For details on the device and changing method, refer to the LECSA series Operation Manual.
CN1-10: MEND (Travel completion)

Positioning mode (Point table method)
For sink (NPN) I/O interface

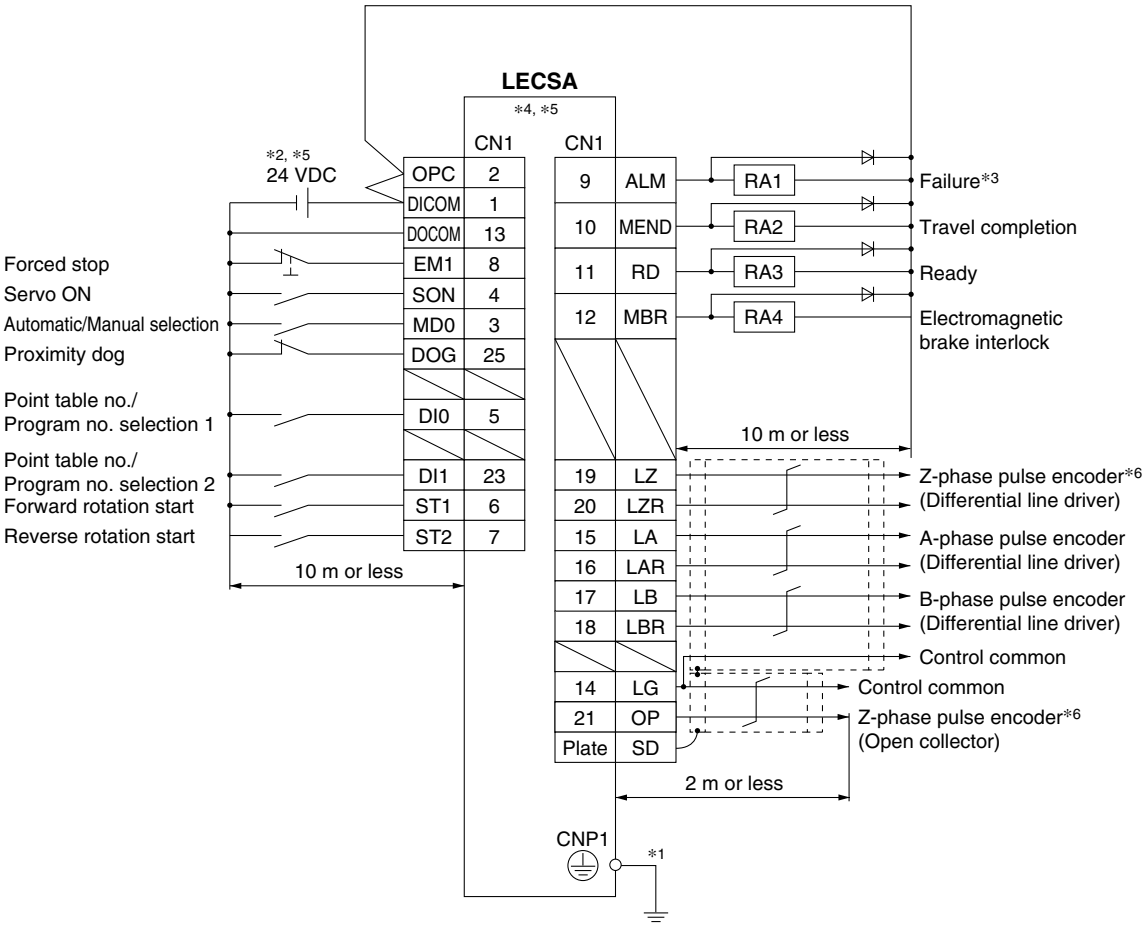

*1 For preventing electric shock, be sure to connect the driver's protective earth (PE) terminal (marked ⏚) to the control panel's protective earth (PE).
*2 For interface use, supply 24 VDC ±10% 200 mA using an external source. 200 mA is the value when all I/O command signals are being used. In addition, reducing the number of inputs/outputs can decrease the current capacity.
*3 The failure (ALM) is normally ON.
*4 Signals of the same name are connected inside the driver.
*5 The wiring example is for the sink (NPN) type interface. Refer to the LECSA series Operation Manual for the source (PNP) type interface. Note that the 23 pin and 25 pin cannot be used for the source type interface.
*6 The Z-phase pulse encoder corresponds to the differential line driver method and the open collector method. If the Z-phase pulse encoder is using the open collector method, it supports only the sink (NPN) type interface. It does not correspond to the source (PNP) type interface.

Control Signal Wiring Example: LECSC2-T□

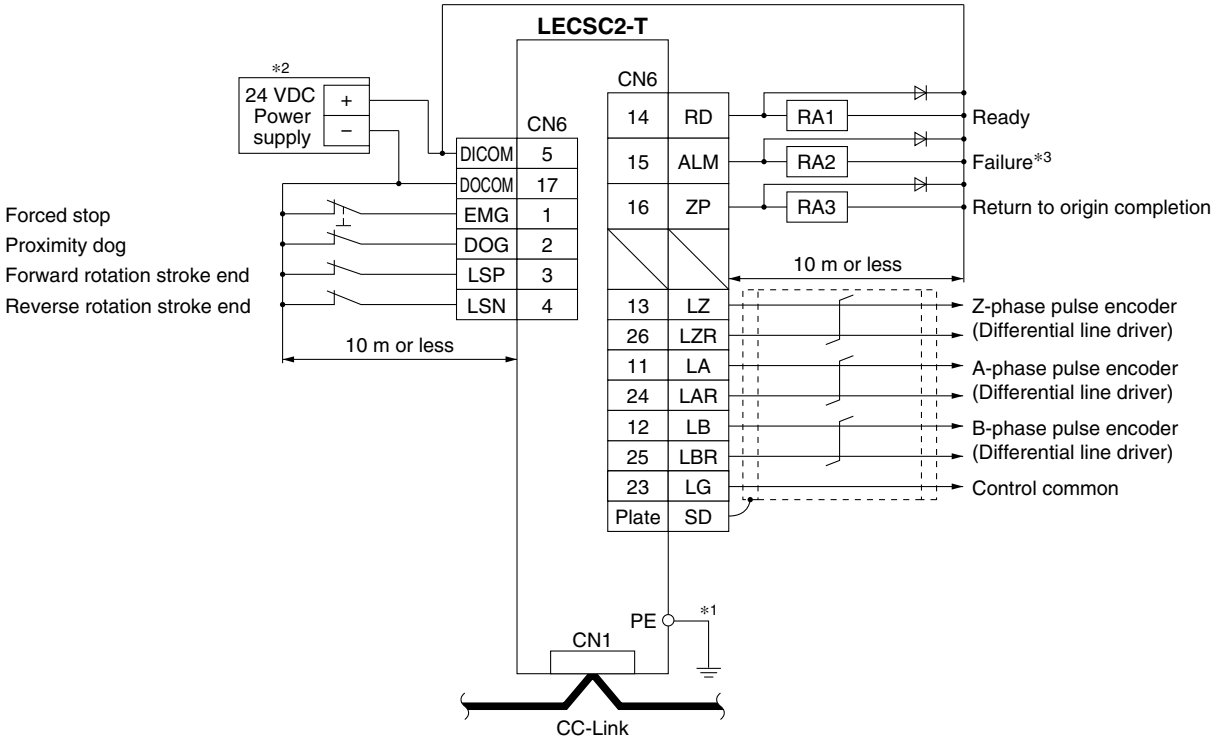

*1 For preventing electric shock, be sure to connect the driver's protective earth (PE) terminal (marked ⏚) to the control panel's protective earth (PE).
*2 For interface use, supply 24 VDC ±10% 150 mA using an external source.
*3 The failure (ALM) is normally ON. When it is OFF (alarm occurs), stop the PLC signal using the sequence program.

Control Signal Wiring Example: LECSB2-T□

This wiring example shows connection with a positioning unit (QD75D) manufactured by Mitsubishi Electric Corporation as when used in position control mode. Refer to the LECSB2-T series Operation Manual and any technical literature or operation manuals for your PLC and positioning unit before connecting to another PLC or positioning unit.

Position control mode
For sink (NPN) I/O interface

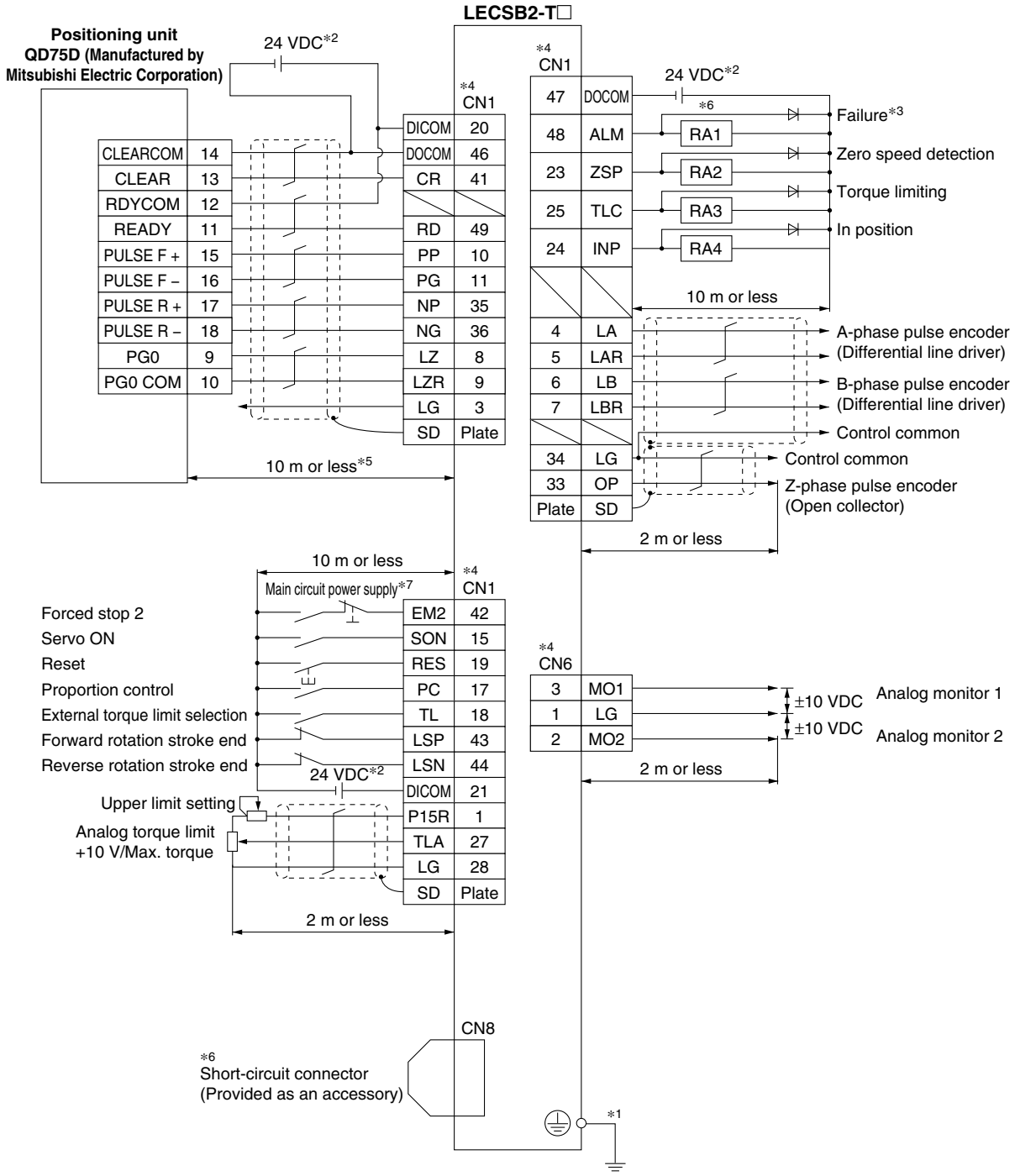

*1 For preventing electric shock, be sure to connect the driver's protective earth (PE) terminal (marked ⏚) to the control panel's protective earth (PE).
*2 For interface use, supply 24 VDC ±10% using an external source. Set the total current capacity to 500 mA. 500 mA is the value when all I/O command signals are being used. In addition, reducing the number of inputs/outputs can decrease the current capacity.
*3 The failure (ALM) is normally ON. When it is OFF (alarm occurs), stop the PLC signal using the sequence program.
*4 Signals of the same name are connected inside the driver.
*5 For command pulse input with a differential line driver method. For open collector method, it is 2 m or less.
*6 When not using the STO function, use the driver with the short-circuit connector (provided as an accessory) inserted.
*7 Configure a circuit to turn off EM2 when the main circuit power is turned off to prevent any unexpected restarts of the driver.

Control Signal Wiring Example: LECSB2-T□

In this wiring example, the devices of the CN1-22 pin, CN1-23 pin, and CN1-25 pin in the initial status have been changed to the devices shown below. For details on the devices and changing method, refer to the LECSB2-T series Operation Manual.
CN1-22: CPO (Rough match)/CN1-23: ZP (Return to origin completion)/CN1-25: MEND (Travel completion)

Positioning mode (Point table method)
For sink (NPN) I/O interface

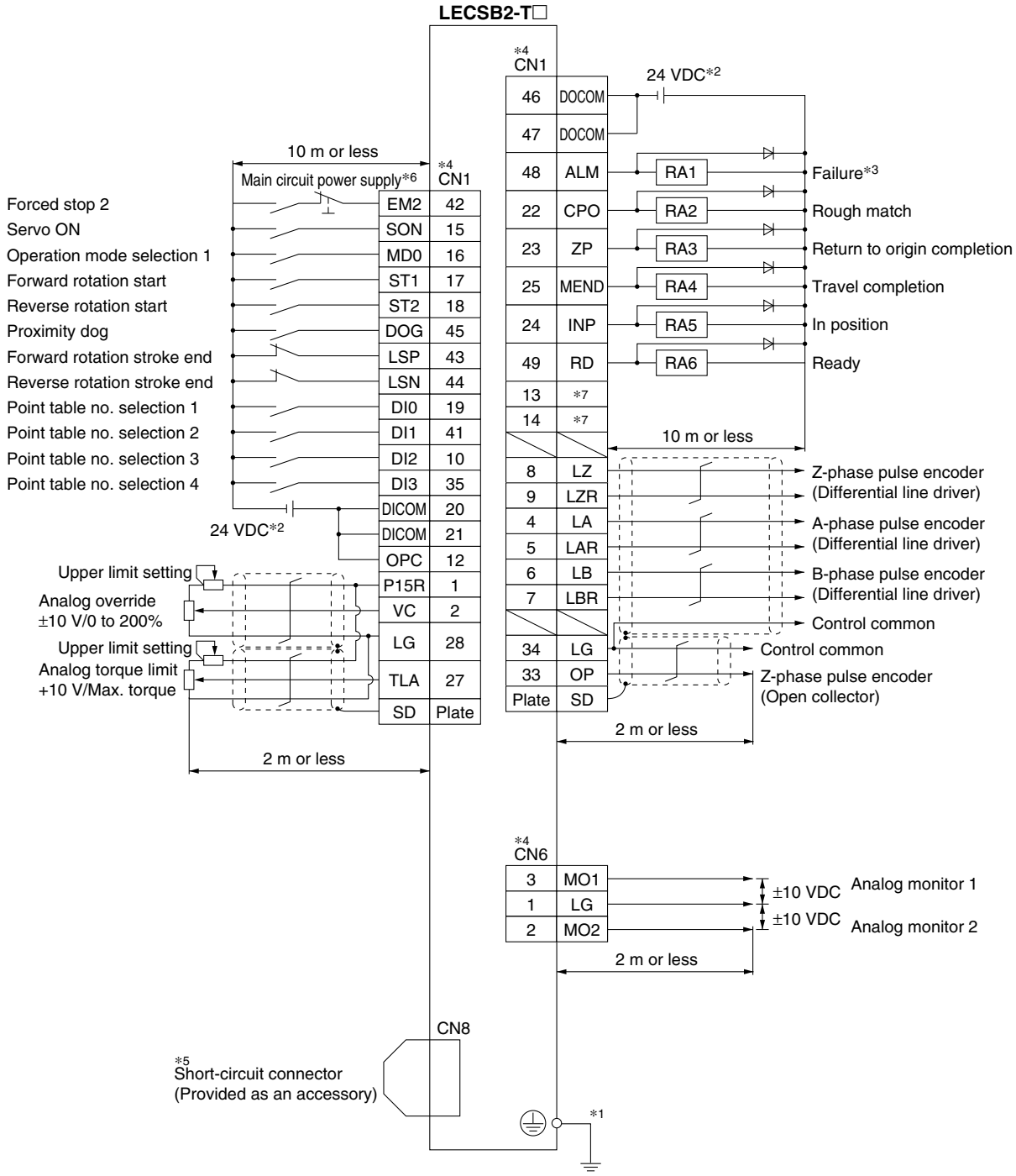

*1 For preventing electric shock, be sure to connect the servo amplifier's protective earth (PE) terminal (marked ⏚) to the control panel's protective earth (PE).
*2 For interface use, supply 24 VDC ±10% using an external source. Set the total current capacity to 500 mA. 500 mA is the value when all I/O command signals are being used. In addition, reducing the number of inputs/outputs can decrease the current capacity.
*3 The ALM (Failure) is normally ON. (Normally closed contact)
*4 Signals of the same name are connected inside the servo amplifier.
*5 When not using the STO function, use the servo amplifier with the short-circuit connector (provided as an accessory) inserted.
*6 Configure a circuit to turn off EM2 when the main circuit power is turned off to prevent any unexpected restarts of the driver.
*7 Output devices are not assigned in the initial status. Assign the output devices as necessary.

Control Signal Wiring Example: LECSS2-T□

For sink (NPN) I/O interface

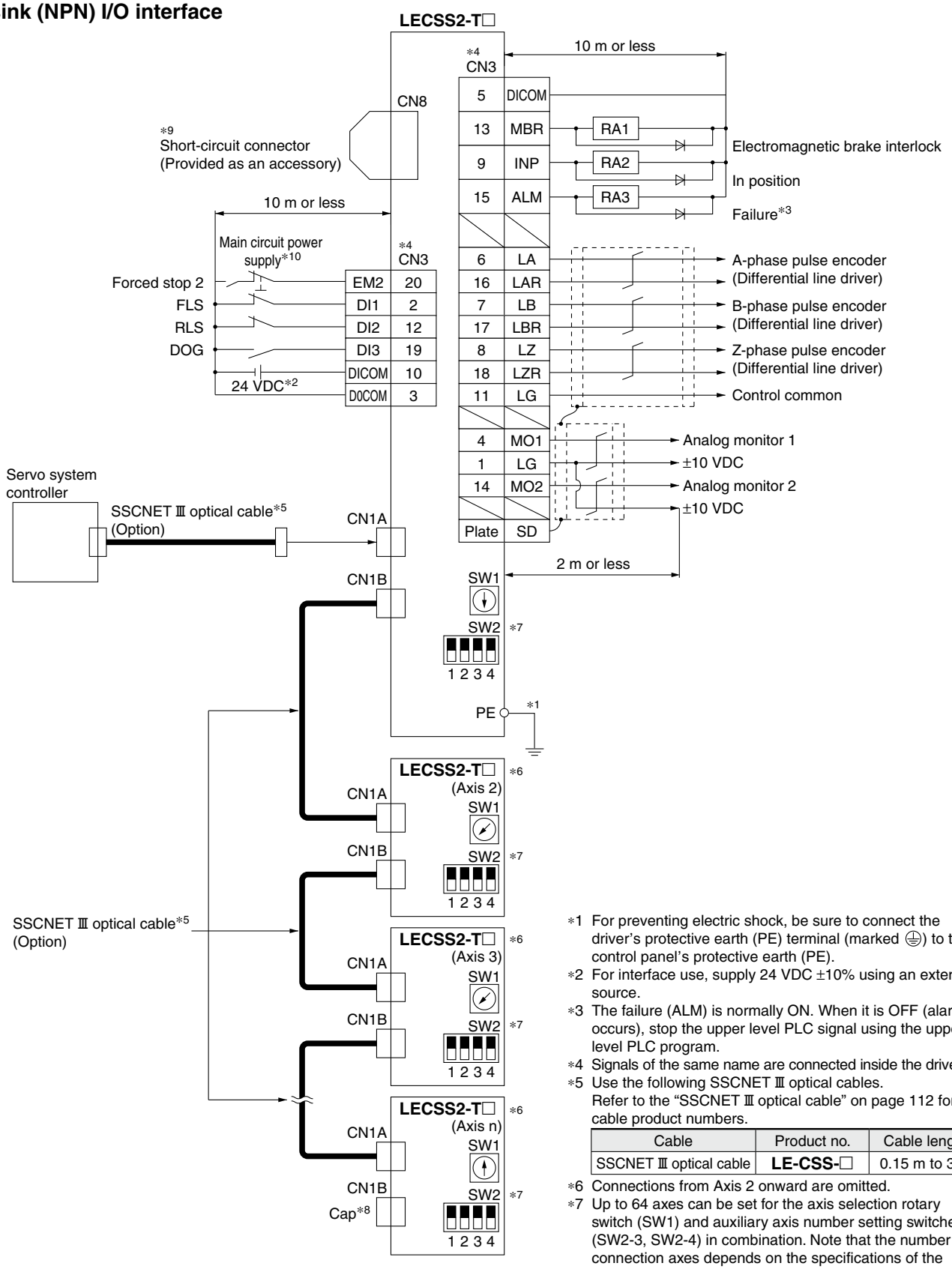

∗1 For preventing electric shock, be sure to connect the driver's protective earth (PE) terminal (marked ⏚) to the control panel's protective earth (PE).

∗2 For interface use, supply 24 VDC ±10% using an external source.

∗3 The failure (ALM) is normally ON. When it is OFF (alarm occurs), stop the upper level PLC signal using the upper level PLC program.

∗4 Signals of the same name are connected inside the driver.

∗5 Use the following SSCNET Ⅲ optical cables.
Refer to the "SSCNET Ⅲ optical cable" on page 112 for cable product numbers.

Cable	Product no.	Cable length
SSCNET Ⅲ optical cable	**LE-CSS-□**	0.15 m to 3 m

∗6 Connections from Axis 2 onward are omitted.

∗7 Up to 64 axes can be set for the axis selection rotary switch (SW1) and auxiliary axis number setting switches (SW2-3, SW2-4) in combination. Note that the number of connection axes depends on the specifications of the upper level PLC.

∗8 Be sure to place a cap on unused CN1A/CN1B.

∗9 When not using the STO function, use the driver with the short-circuit connector (provided as an accessory) inserted.

∗10 Configure a circuit to turn off EM2 when the main circuit power is turned off to prevent any unexpected restarts of the driver.

Options

Motor cable, Lock cable, Encoder cable (LECSA, LECS□-T common)

LE − CS M − S 5 A

Motor type

S	AC servo motor

Cable description

M	Motor cable
B	Lock cable
E	Encoder cable

Cable type

S	Standard cable
R	Robotic cable

Cable length (L) [m]

2	2
5	5
A	10

Direction of connector

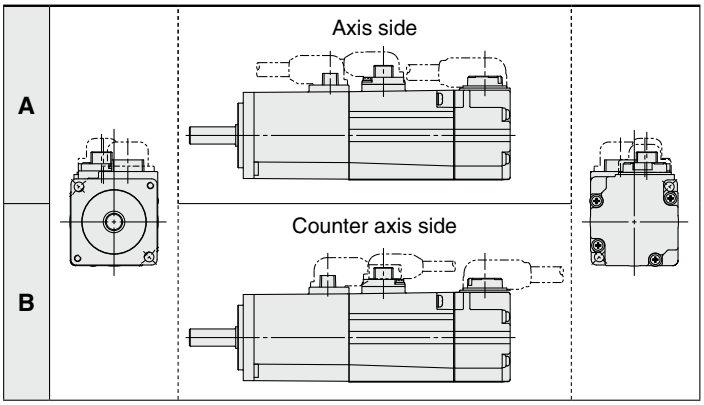

LE-CSM-□□: Motor cable

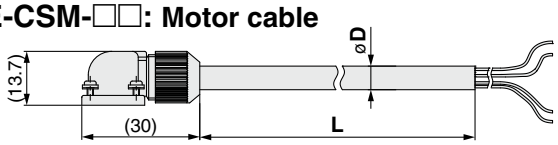

Product no.	ø D
LE-CSM-S□A	6.2
LE-CSM-S□B	
LE-CSM-R□A	5.7
LE-CSM-R□B	

Weight

Product no.	Length [m]	Weight [g]
LE-CSM-S2□	2	180
LE-CSM-S5□	5	400
LE-CSM-SA□	10	800
LE-CSM-R2□	2	180
LE-CSM-R5□	5	400
LE-CSM-RA□	10	800

LE-CSB-□□: Lock cable*1

Product no.	ø D
LE-CSB-S□A	4.7
LE-CSB-S□B	
LE-CSB-R□A	4.5
LE-CSB-R□B	

Weight

Product no.	Length [m]	Weight [g]
LE-CSB-S2□	2	80
LE-CSB-S5□	5	200
LE-CSB-SA□	10	400
LE-CSB-R2□	2	80
LE-CSB-R5□	5	200
LE-CSB-RA□	10	400

LE-CSE-□□: Encoder cable

Weight

Product no.	Length [m]	Weight [g]
LE-CSE-S2□	2	220
LE-CSE-S5□	5	600
LE-CSE-SA□	10	1200
LE-CSE-R2□	2	220
LE-CSE-R5□	5	600
LE-CSE-RA□	10	1200

*1 If using an actuator with a lock, a lock cable is required.

I/O connector (Without cable, Connector only)

LE − CSN A

Driver type

A	**LECSA□, LECSC2-T□**
B	**LECSB2-T□**
S	**LECSS2-T□**

LE-CSNA

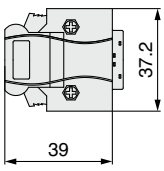

LE-CSNB

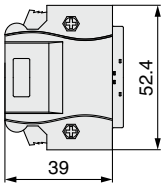

LE-CSNS

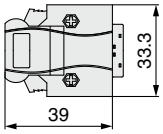

Weight

Product no.	Weight [g]
LE-CSNA	25
LE-CSNB	30
LE-CSNS	16

* LE-CSNA: 10126-3000PE (connector)/10326-52F0-008 (shell kit) manufactured by 3M Japan Limited or equivalent
  LE-CSNB: 10150-3000PE (connector)/10350-52F0-008 (shell kit) manufactured by 3M Japan Limited or equivalent
  LE-CSNS: 10120-3000PE (connector)/10320-52F0-008 (shell kit) manufactured by 3M Japan Limited or equivalent
* Applicable conductor size: AWG24 to 30
* If using the LECSB-T in any mode other than positioning mode, forced stop (EM2) wiring is required in all cases. (The electric actuator will not operate without the wiring.)
  Prepare an I/O connector or an I/O cable in advance.

Options

SSCNET Ⅲ optical cable (LECSS2-T□)

LE − CSS − 1

Motor type

S	AC servo motor

Cable description

S	SSCNET Ⅲ optical cable

Cable length

L	0.15 m
K	0.3 m
J	0.5 m
1	1 m
3	3 m

∗ LE-CSS-□ is MR-J3BUS□M manufactured by Mitsubishi Electric Corporation.

Weight

Product no.	Length [m]	Weight [g]
LE-CSS-L	0.15	100
LE-CSS-K	0.3	100
LE-CSS-J	0.5	200
LE-CSS-1	1	200
LE-CSS-3	3	200

I/O cable

LEC − CSN A − 1

Driver type

A	**LECSA□, LECSC2-T□**
B	**LECSB2-T□**
S	**LECSS2-T□**

Cable length (L) [m]

1	1.5

Weight

Product no.	Weight [g]
LEC-CSNA-1	303
LEC-CSNB-1	472
LEC-CSNS-1	221

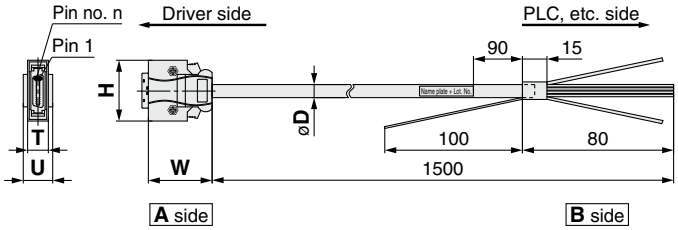

∗ LEC-CSNA-1: 10126-3000PE (connector)/10326-52F0-008 (shell kit) manufactured by 3M Japan Limited or equivalent
LEC-CSNB-1: 10150-3000PE (connector)/10350-52F0-008 (shell kit) manufactured by 3M Japan Limited or equivalent
LEC-CSNS-1: 10120-3000PE (connector)/10320-52F0-008 (shell kit) manufactured by 3M Japan Limited or equivalent
∗ Conductor size: AWG24
∗ If using the LECSB-T in any mode other than positioning mode, forced stop (EM2) wiring is required in all cases. (The electric actuator will not operate without the wiring.)
Prepare an I/O connector or an I/O cable in advance.

Cable O.D.

Product no.	øD
LEC-CSNA-1	11.1
LEC-CSNB-1	13.8
LEC-CSNS-1	9.1

Dimensions/Pin Nos.

Product no.	W	H	T	U	Pin no. n
LEC-CSNA-1	39	37.2	12.7	14	14
LEC-CSNB-1		52.4		18	26
LEC-CSNS-1		33.3		14	21

Wiring

LEC-CSNA-1: Pin nos. 1 to 26
LEC-CSNB-1: Pin nos. 1 to 50
LEC-CSNS-1: Pin nos. 1 to 20

	Connector pin no.	Pair no. of wire	Insulation color	Dot mark	Dot color
A side	1	1	Orange	▬	Red
	2			▬	Black
	3	2	Light gray	▬	Red
	4			▬	Black
	5	3	White	▬	Red
	6			▬	Black
	7	4	Yellow	▬	Red
	8			▬	Black
	9	5	Pink	▬	Red
	10			▬	Black
	11	6	Orange	▬▬	Red
	12			▬▬	Black
	13	7	Light gray	▬▬	Red
	14			▬▬	Black
	15	8	White	▬▬	Red
	16			▬▬	Black
	17	9	Yellow	▬▬	Red
	18			▬▬	Black

	Connector pin no.	Pair no. of wire	Insulation color	Dot mark	Dot color
A side	19	10	Pink	▬▬	Red
	20			▬▬	Black
	21	11	Orange	▬▬▬	Red
	22			▬▬▬	Black
	23	12	Light gray	▬▬▬	Red
	24			▬▬▬	Black
	25	13	White	▬▬▬	Red
	26			▬▬▬	Black
	27	14	Yellow	▬▬▬	Red
	28			▬▬▬	Black
	29	15	Pink	▬▬▬	Red
	30			▬▬▬	Black
	31	16	Orange	▬▬▬▬	Red
	32			▬▬▬▬	Black
	33	17	Light gray	▬▬▬▬	Red
	34			▬▬▬▬	Black

	Connector pin no.	Pair no. of wire	Insulation color	Dot mark	Dot color
A side	35	18	White	▬▬▬▬	Red
	36			▬▬▬▬	Black
	37	19	Yellow	▬▬▬▬	Red
	38			▬▬▬▬	Black
	39	20	Pink	▬▬▬▬	Red
	40			▬▬▬▬	Black
	41	21	Orange	▬▬▬▬▬ (Continuous)	Red
	42			▬▬▬▬▬ (Continuous)	Black
	43	22	Light gray	▬▬▬▬▬ (Continuous)	Red
	44			▬▬▬▬▬ (Continuous)	Black
	45	23	White	▬▬▬▬▬ (Continuous)	Red
	46			▬▬▬▬▬ (Continuous)	Black
	47	24	Yellow	▬▬▬▬▬ (Continuous)	Red
	48			▬▬▬▬▬ (Continuous)	Black
	49	25	Pink	▬▬▬▬▬ (Continuous)	Red
	50			▬▬▬▬▬ (Continuous)	Black

Options

Regeneration option (LECS□ common)

LEC − MR − RB − 12

Regeneration option type

032	Allowable regenerative power 30 W
12	Allowable regenerative power 100 W

∗ Confirm regeneration option to be used in “Model Selection.”

LEC-MR-RB-032

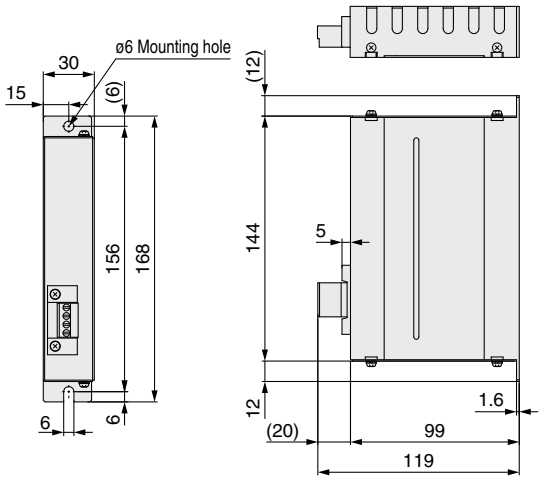

Weight

Product no.	Weight [kg]
LEC-MR-RB-032	0.5

∗ MR-RB032 manufactured by Mitsubishi Electric Corporation

LEC-MR-RB-12

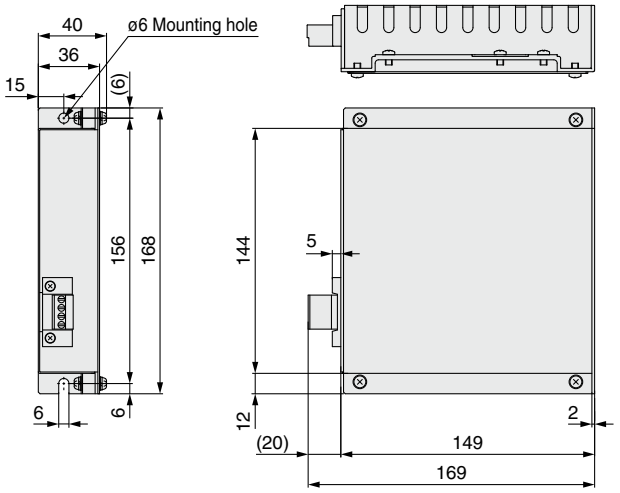

Weight

Product no.	Weight [kg]
LEC-MR-RB-12	1.1

∗ MR-RB12 manufactured by Mitsubishi Electric Corporation

Options

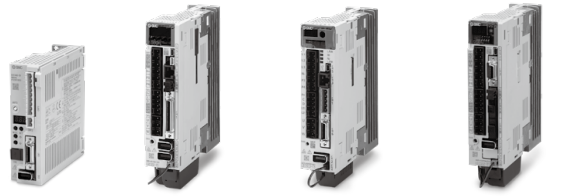

LECSA LECSB2-T□ LECSC2-T□ LECSS2-T□

Drivers

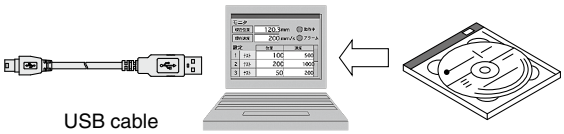

USB cable

PC

Setup software (MR Configurator2™)

Setup software (MR Configurator2™) (LECSA, LECSB2-T□, LECSC2-T□, LECSS-T common)

LEC−MRC2□

Display language

Nil	Japanese version
E	English version
C	Chinese version

∗ SW1DNC-MRC2-□ manufactured by Mitsubishi Electric Corporation
Refer to Mitsubishi Electric Corporation's website for operating environment and version upgrade information.
MR Configurator2™ is a registered trademark or trademark of Mitsubishi Electric Corporation.

Adjustment, waveform display, diagnostics, parameter reading/writing, and test operations can be performed on a PC.

Compatible PCs

When using the setup software (MR Configurator2™), use an IBM PC/AT compatible PC that meets the following operating conditions.

Hardware Requirements

Equipment		Setup software (MR Configurator2™) **LEC-MRC2□**
∗1, 2, 3, 4, 5, 6, 7, 8, 9, 10 PC	OS	Microsoft® Windows® 10 Edition Microsoft® Windows® 10 Enterprise Microsoft® Windows® 10 Pro Microsoft® Windows® 10 Home Microsoft® Windows® 8.1 Enterprise Microsoft® Windows® 8.1 Pro Microsoft® Windows® 8.1 Microsoft® Windows® 8 Enterprise Microsoft® Windows® 8 Pro Microsoft® Windows® 8 Microsoft® Windows® 7 Ultimate Microsoft® Windows® 7 Enterprise Microsoft® Windows® 7 Professional Microsoft® Windows® 7 Home Premium Microsoft® Windows® 7 Starter Microsoft® Windows Vista® Ultimate Microsoft® Windows Vista® Enterprise Microsoft® Windows Vista® Business Microsoft® Windows Vista® Home Premium Microsoft® Windows Vista® Home Basic Microsoft® Windows® XP Professional, Service Pack 3 or later Microsoft® Windows® XP Home Edition, Service Pack 3 or later
	Hard disk	1 GB or more of free space
	Communication interface	Uses the USB port
Display		Resolution: 1024 x 768 or more Must be capable of high color (16-bit) display. Connectable with the PCs listed above
Keyboard		Connectable with the PCs listed above
Mouse		Connectable with the PCs listed above
Printer		Connectable with the PCs listed above
USB cable∗11		LEC-MR-J3USB

Setup Software Compatible Drivers

Compatible driver	Setup software	
	MR Configurator™	MR Configurator2™
	LEC-MR-SETUP221□	LEC-MRC2□
LECSA	○	○
LECSB2-T□	—	○
LECSC2-T□	—	○
LECSS2-T□	—	○

∗1 Before using a PC for setting LECSA point table method/program operation method, upgrade to version 1.18U (Japanese version)/ version 1.19V (English version) or later. Refer to Mitsubishi Electric Corporation's website for version upgrade information.
∗2 Windows® and Windows Vista® are registered trademarks of Microsoft Corporation in the United States and other countries.
∗3 On some PCs, setup software (MR Configurator2™) may not run properly.
∗4 The following functions cannot be used. If any of the following functions is used, this product may not operate normally.
· Start of application in Windows® compatible mode
· Fast User Switching
· Remote Desktop
· Windows XP Mode
· Windows Touch or Touch
· Modern UI
· Client Hyper-V
· Tablet Mode
· Virtual desktop
· 64-bit OSs are not supported, except for Microsoft® Windows®7 or later.
∗5 Multi-display is set, the screen of this product may not operate normally.
∗6 The size of the text or other items on the screen is not changed to the specified value (96 DPI, 100%, 9 pt, etc.), the screen of this product may not operate normally.
∗7 Changed the resolution of the screen during operating, the screen of this product may not operate normally.
∗8 Please use by "Standard User," "Administrator" in Windows Vista® or later.
∗9 Using a PC for setting Windows®10, upgrade to version 1.52E or later.
Using a PC for setting Windows®8.1, upgrade to version 1.25B or later.
Using a PC for setting Windows®8, upgrade to version 1.20W or later.
Refer to Mitsubishi Electric Corporation's website for version upgrade information.
∗10 If .NET Framework 3.5 (including .NET 2.0 and 3.0) have been disabled in Windows®7 or later, it is necessary to enable it.
∗11 Order a USB cable separately.
· This cable is compatible with the setup software (MR Configurator™: LEC-MR-SETUP221□).

Options

USB cable (3 m)
(LECSA, LECSB-T, LECSC-T, LECSS-T common)

LEC−MR−J3USB

∗ MR-J3USBCBL3M manufactured by Mitsubishi Electric Corporation

Weight: 140 g

Cable for connecting the PC and driver when using the setup software (MR Configurator2™)
Do not use any cable other than this cable.

STO cable (3 m)
(Only for LECSB2-T□ and LECSS2-T□)

LEC−MR−D05UDL3M

∗ MR-D05UDL3M-B manufactured by Mitsubishi Electric Corporation

Cable for connecting the driver and device, when using the safety function
Do not use any cable other than this cable.

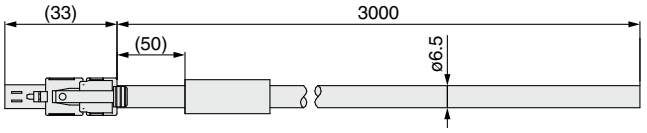

Weight: 500 g

Battery

Replacement batteries must be purchased from Mitsubishi Electric Corporation.

Part no.: MR-J3BAT
manufactured by Mitsubishi Electric Corporation

Battery for replacement
Absolute position data is maintained by installing the battery to the driver.

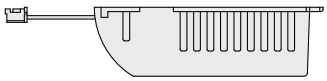

Weight: 30 g

∗ The MR-J3BAT is a single battery that uses a lithium metal battery ER6V.
When transporting lithium metal batteries and devices with built-in lithium metal batteries by a method subject to UN regulations, it is necessary to apply measures according to the regulations stipulated in the United Nations Recommendations on the Transport of Dangerous Goods, the Technical Instructions (ICAO-TI) of the International Civil Aviation Organization (ICAO), and the International Maritime Dangerous Goods Code (IMDG CODE) of the International Maritime Organization (IMO). If a customer is to transport such products, it is necessary for them to confirm the latest regulations, or the laws and regulations of the country of transport, on their own in order to apply the proper measures.

Part no.: MR-BAT6V1SET
manufactured by Mitsubishi Electric Corporation

Battery for replacement
Absolute position data is maintained by installing the battery to the driver.

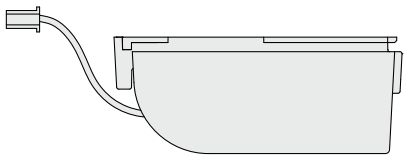

Weight: 60 g

∗ The MR-BAT6V1SET is an assembled battery that uses a lithium metal battery 2CR17335A.
When transporting lithium metal batteries and devices with built-in lithium metal batteries by a method subject to UN regulations, it is necessary to apply measures according to the regulations stipulated in the United Nations Recommendations on the Transport of Dangerous Goods, the Technical Instructions (ICAO-TI) of the International Civil Aviation Organization (ICAO), and the International Maritime Dangerous Goods Code (IMDG CODE) of the International Maritime Organization (IMO). If a customer is to transport such products, it is necessary for them to confirm the latest regulations, or the laws and regulations of the country of transport, on their own in order to apply the proper measures.

Battery Types and Compatible Drivers

Compatible driver	Battery type	
	MR-J3BAT	MR-BAT6V1SET
LECSB□-T□	—	○
LECSC□-T□	○	—
LECSS□-T□	—	○

MECHATROLINK Compatible

AC Servo Motor Driver
Absolute Type
LECYM/LECYU Series

(MECHATROLINK-Ⅱ Type) (MECHATROLINK-Ⅲ Type)

LECYM LECYU

CE UKCA RoHS

∗ For details, refer to page 128.

How to Order

Driver **LECY M 2 −** □

Driver type

M	MECHATROLINK-Ⅱ type (For absolute encoder)
U	MECHATROLINK-Ⅲ type (For absolute encoder)

Power supply voltage

2	200 to 230 VAC, 50/60 Hz

∗ **If an I/O connector (CN1) is required, order the part number "LE-CYNA" separately.**
∗ **If an I/O cable (CN1) is required, order the part number "LEC-CSNA-1" separately.**

Compatible motor type

Symbol	Type	Capacity	Encoder
V5	AC servo motor (V6∗1)	100 W	Absolute
V7	AC servo motor (V7∗1)	200 W	

∗1 The symbol shows the motor type (actuator).

Dimensions

MECHATROLINK-Ⅱ type

LECYM2-V□

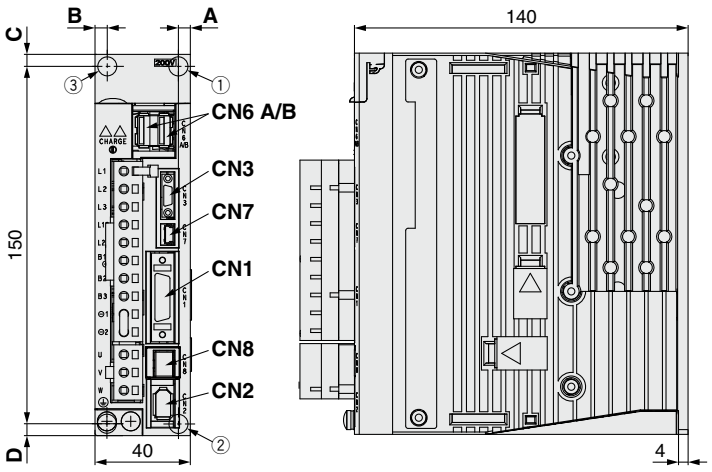

Connector name	Description
CN1	I/O signal connector
CN2	Encoder connector
CN3∗1	Digital operator connector
CN6A	MECHATROLINK-Ⅱ communication connector
CN6B	MECHATROLINK-Ⅱ communication connector
CN7	PC connector
CN8	Safety connector

∗1 Digital operator is JUSP-OP05A-1-E manufactured by YASKAWA Electric Corporation. When using the digital operator, it should be provided by the customer.

Motor capacity	Hole position	Mounting dimensions A	B	C	D	Mounting hole
V5 (100 W)	①②	5	—	5	5	ø5
V7 (200 W)	①②	5	—	5	5	

∗ The mounting hole position varies depending on the motor capacity.

MECHATROLINK-Ⅲ type

LECYU2-V□

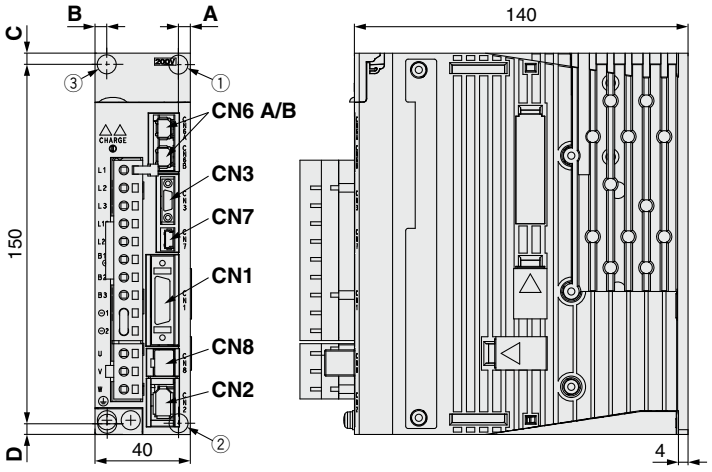

Connector name	Description
CN1	I/O signal connector
CN2	Encoder connector
CN3∗1	Digital operator connector
CN6A	MECHATROLINK-Ⅲ communication connector
CN6B	MECHATROLINK-Ⅲ communication connector
CN7	PC connector
CN8	Safety connector

∗1 Digital operator is JUSP-OP05A-1-E manufactured by YASKAWA Electric Corporation. When using the digital operator, it should be provided by the customer.

Motor capacity	Hole position	Mounting dimensions A	B	C	D	Mounting hole
V5 (100 W)	①②	5	—	5	5	ø5
V7 (200 W)	①②	5	—	5	5	

∗ The mounting hole position varies depending on the motor capacity.

Specifications

MECHATROLINK-Ⅱ Type

Model			LECYM2-V5	LECYM2-V7
Rated power supply capacity [kVA]			0.3	0.6
Max. power supply capacity [kVA]			1.05	2.1
Compatible motor capacity [W]			100	200
Compatible encoder			Absolute 20-bit encoder (Resolution: 1048576 p/rev)	
Main circuit power supply	Power voltage [V]*2		Three phase 200 to 230 VAC (50/60 Hz)	
	Allowable voltage fluctuation [V]*2		Three phase 170 to 253 VAC	
Control power supply	Power voltage [V]		Single phase 200 to 230 VAC (50/60 Hz)	
	Allowable voltage fluctuation [V]		Single phase 170 to 253 VAC	
Power supply capacity (at rated output) [A]			0.91	1.6
Input circuit			NPN (Sink circuit)/PNP (Source circuit)	
Parallel input (7 inputs)	Number of optional allocations	7 inputs	[Initial allocation] · Homing deceleration switch (/DEC) · External latch (/EXT 1 to 3) · Forward run prohibited (P-OT), reverse run prohibited (N-OT) [Can be allocated by setting the parameters] · Forward external torque limit (/P-CL), reverse external torque limit (/N-CL) Signal allocations can be performed, and positive and negative logic can be changed.	
Parallel output (4 outputs)	Number of fixed allocations	1 output	· Servo alarm (ALM)	
	Number of optional allocations	3 outputs	[Initial allocation] · Lock (/BK) [Can be allocated by setting the parameters] · Positioning completion (/COIN) · Speed limit detection (/VLT) · Speed coincidence detection (/V-CMP) · Rotation detection (/TGON) · Warning (/WARN) · Servo ready (/S-RDY) · Near (/NEAR) · Torque limit detection (/CLT) Signal allocations can be performed, and positive and negative logic can be changed.	
MECHATROLINK communication	Communication protocol		MECHATROLINK-Ⅱ	
	Station address		41H to 5FH	
	Transmission speed		10 Mbps	
	Transmission cycle		250 μs, 0.5 ms to 4 ms (Multiples of 0.5 ms)	
	Number of transmission bytes		17 bytes, 32 bytes	
	Max. number of stations		30	
	Cable length		Overall cable length: 50 m or less, Cable length between the stations: 0.5 m or more	
Command method	Control method		Position, speed, or torque control with MECHATROLINK-Ⅱ communication	
	Command input		MECHATROLINK-Ⅱ command (Motion, data setting, monitoring, or adjustment)	
Function	Gain adjustment		Tuning-less/Advanced auto tuning/One-parameter tuning	
	Communication setting		USB communication, RS-422 communication	
	Torque limit		Internal torque limit, external torque limit, and torque limit by analog command	
	Encoder output		Phase A, B, Z: Line driver output	
	Emergency stop		CN8 Safety function	
	Overtravel		Dynamic brake stop, deceleration to a stop, or free run to a stop at P-OT or N-OT	
	Alarm		Alarm signal, MECHATROLINK-Ⅱ command	
Operating temperature range [°C]			0 to 55 (No freezing)	
Operating humidity range [%RH]			90 or less (No condensation)	
Storage temperature range [°C]			–20 to 85 (No freezing)	
Storage humidity range [%RH]			90 or less (No condensation)	
Enclosure			IP10	
Insulation resistance [MΩ]			10 MΩ (500 VDC)	
Safety function			STO (IEC 61800-5-2)	
Safety standards*1			EN ISO 13849-1 Category 3 PL d, IEC 61508 SIL2, IEC 62061 SIL CL2, IEC 61800-5-2	
Weight [g]			900	

*1 Refer to the LECYM operation manual for details.
*2 Three phase 400 VAC is not supported.

Specifications

MECHATROLINK-Ⅲ Type

Model			LECYU2-V5	LECYU2-V7
Rated power supply capacity [kVA]			0.3	0.6
Max. power supply capacity [kVA]			1.05	2.1
Compatible motor capacity [W]			100	200
Compatible encoder			Absolute 20-bit encoder (Resolution: 1048576 p/rev)	
Main circuit power supply	Power voltage [V]*2		Three phase 200 to 230 VAC (50/60 Hz)	
	Allowable voltage fluctuation [V]*2		Three phase 170 to 253 VAC	
Control power supply	Power voltage [V]		Single phase 200 to 230 VAC (50/60 Hz)	
	Allowable voltage fluctuation [V]		Single phase 170 to 253 VAC	
Power supply capacity (at rated output) [A]			0.91	1.6
Input circuit			NPN (Sink circuit)/PNP (Source circuit)	
Parallel input (7 inputs)	Number of optional allocations	7 inputs	[Initial allocation] · Homing deceleration switch (/DEC) · External latch (/EXT 1 to 3) · Forward run prohibited (P-OT), reverse run prohibited (N-OT) [Can be allocated by setting the parameters] · Forward external torque limit (/P-CL), reverse external torque limit (/N-CL) Signal allocations can be performed, and positive and negative logic can be changed.	
Parallel output (4 outputs)	Number of fixed allocations	1 output	· Servo alarm (ALM)	
	Number of optional allocations	3 outputs	[Initial allocation] · Lock (/BK) [Can be allocated by setting the parameters] · Positioning completion (/COIN) · Speed limit detection (/VLT) · Speed coincidence detection (/V-CMP) · Rotation detection (/TGON) · Warning (/WARN) · Servo ready (/S-RDY) · Near (/NEAR) · Torque limit detection (/CLT) Signal allocations can be performed, and positive and negative logic can be changed.	
MECHATROLINK communication	Communication protocol		MECHATROLINK-Ⅲ	
	Station address		03H to EFH	
	Transmission speed		100 Mbps	
	Transmission cycle		125 µs, 250 µs, 500 µs, 750 µs, 1 ms to 4 ms (Multiples of 0.5 ms)	
	Number of transmission bytes		16 bytes, 32 bytes, 48 bytes	
	Max. number of stations		62	
	Cable length		Cable length between the stations: 0.5 m or more, 75 m or less	
Command method	Control method		Position, speed, or torque control with MECHATROLINK-Ⅲ communication	
	Command input		MECHATROLINK-Ⅲ command (Motion, data setting, monitoring, or adjustment)	
Function	Gain adjustment		Tuning-less/Advanced auto tuning/One-parameter tuning	
	Communication setting		USB communication, RS-422 communication	
	Torque limit		Internal torque limit, external torque limit, and torque limit by analog command	
	Encoder output		Phase A, B, Z: Line driver output	
	Emergency stop		CN8 Safety function	
	Overtravel		Dynamic brake stop, deceleration to a stop, or free run to a stop at P-OT or N-OT	
	Alarm		Alarm signal, MECHATROLINK-Ⅲ command	
Operating temperature range [°C]			0 to 55 (No freezing)	
Operating humidity range [%RH]			90 or less (No condensation)	
Storage temperature range [°C]			–20 to 85 (No freezing)	
Storage humidity range [%RH]			90 or less (No condensation)	
Enclosure			IP10	
Insulation resistance [MΩ]			10 MΩ (500 VDC)	
Safety function			STO (IEC 61800-5-2)	
Safety standards*1			EN ISO 13849-1 Category 3 PL d, IEC 61508 SIL2, IEC 62061 SIL CL2, IEC 61800-5-2	
Weight [g]			900	

*1 Refer to the LECYU operation manual for details.
*2 Three phase 400 VAC is not supported.

Power Supply Wiring Example: LECY□

■Three phase 200 V LECYM2-□ LECYU2-□

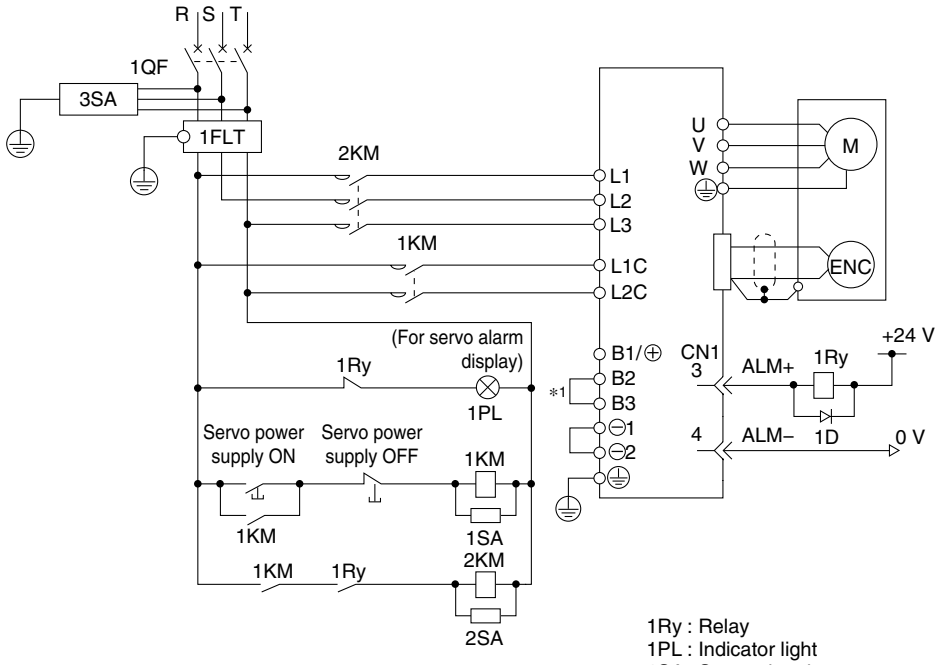

1QF : Molded-case circuit breaker
1FLT: Noise filter
1KM : Magnetic contactor (for control power supply)
2KM : Magnetic contactor (for main circuit power supply)

1Ry : Relay
1PL : Indicator light
1SA : Surge absorber
2SA : Surge absorber
3SA : Surge absorber
1D : Flywheel diode

∗1 For the LECY□2-V5 and LECY□2-V7, terminals B2 and B3 are not short-circuited. Do not short-circuit these terminals.
∗ Three phase 400 VAC is not supported.

Main Circuit Power Supply Connector ∗ Accessory

Terminal name	Function	Details
L1	Main circuit power supply	Connect the main circuit power supply. Single phase 200 to 230 VAC, 50/60 Hz Connection terminal: L1, L2 Three phase 200 to 230 VAC, 50/60 Hz Connection terminal: L1, L2, L3
L2		
L3		
L1C	Control power supply	Connect the control power supply. Single phase 200 to 230 VAC, 50/60 Hz Connection terminal: L1C, L2C
L2C		
B1/⊕	External regenerative resistor connection terminal	When the regenerative resistor is required, connect it between terminals B1⊕ and B2.
B2		
B3		
⊖1	Main circuit negative terminal	⊖1 and ⊖2 are connected at shipment.
⊖2		

Motor Connector ∗ Accessory

Terminal name	Function	Details
U	Servo motor power (U)	Connect to motor cable (U, V, W).
V	Servo motor power (V)	
W	Servo motor power (W)	

Power Supply Wire Specifications

Item	Specifications
Applicable wire size	L1, L2, L3, L1C, L2C Single wire, Twisted wire, AWG14 (2.0 mm^2)
Stripped wire length	8 to 9 mm

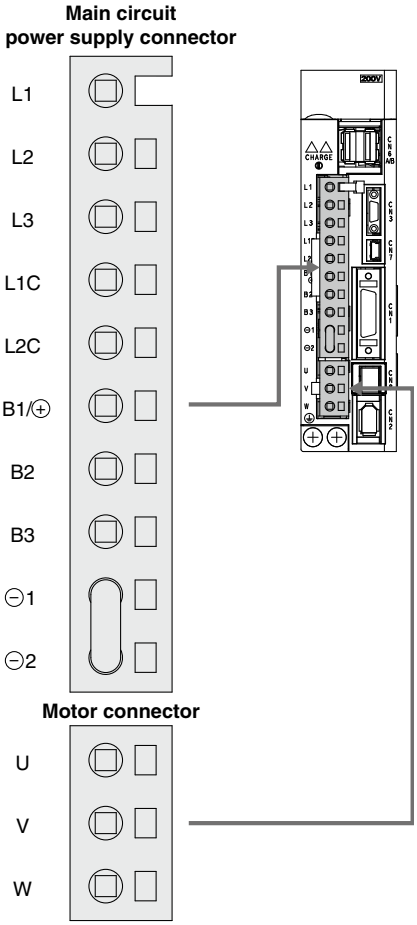

Control Signal Wiring Example: LECYM

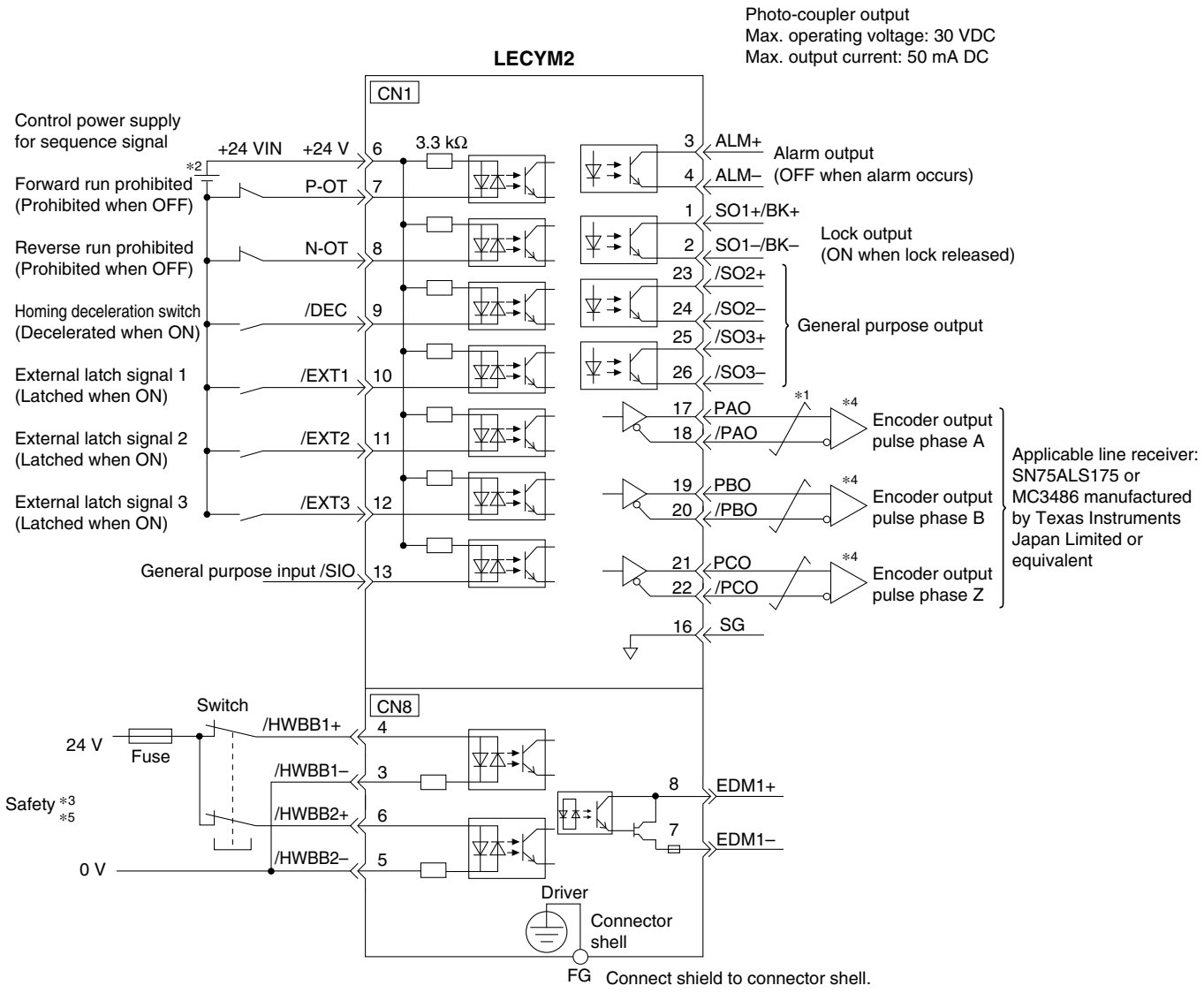

∗1 ⫫ shows twisted-pair wires.
∗2 The 24 VDC power supply is not included. Use a 24 VDC power supply with double insulation or reinforced insulation.
∗3 When using the safety function, a safety function device must be connected to the wiring that is necessary to activate the safety function. Otherwise, the servo motor is not turned ON. When not using the safety function, use the driver with the Safety Jumper Connector (provided as an accessory) inserted into the CN8.
∗4 Always use line receivers to receive the output signals.
∗∗ The functions allocated to the input signals /DEC, P-OT, N-OT, /EXT1, /EXT2, and /EXT3, and the output signals /SO1, /SO2, and /SO3 can be changed by setting the parameters.
∗5 It is a safety function equivalent to the STO function (IEC 61800-5-2) using the hard wire base block function (HWBB).

Control Signal Wiring Example: LECYU

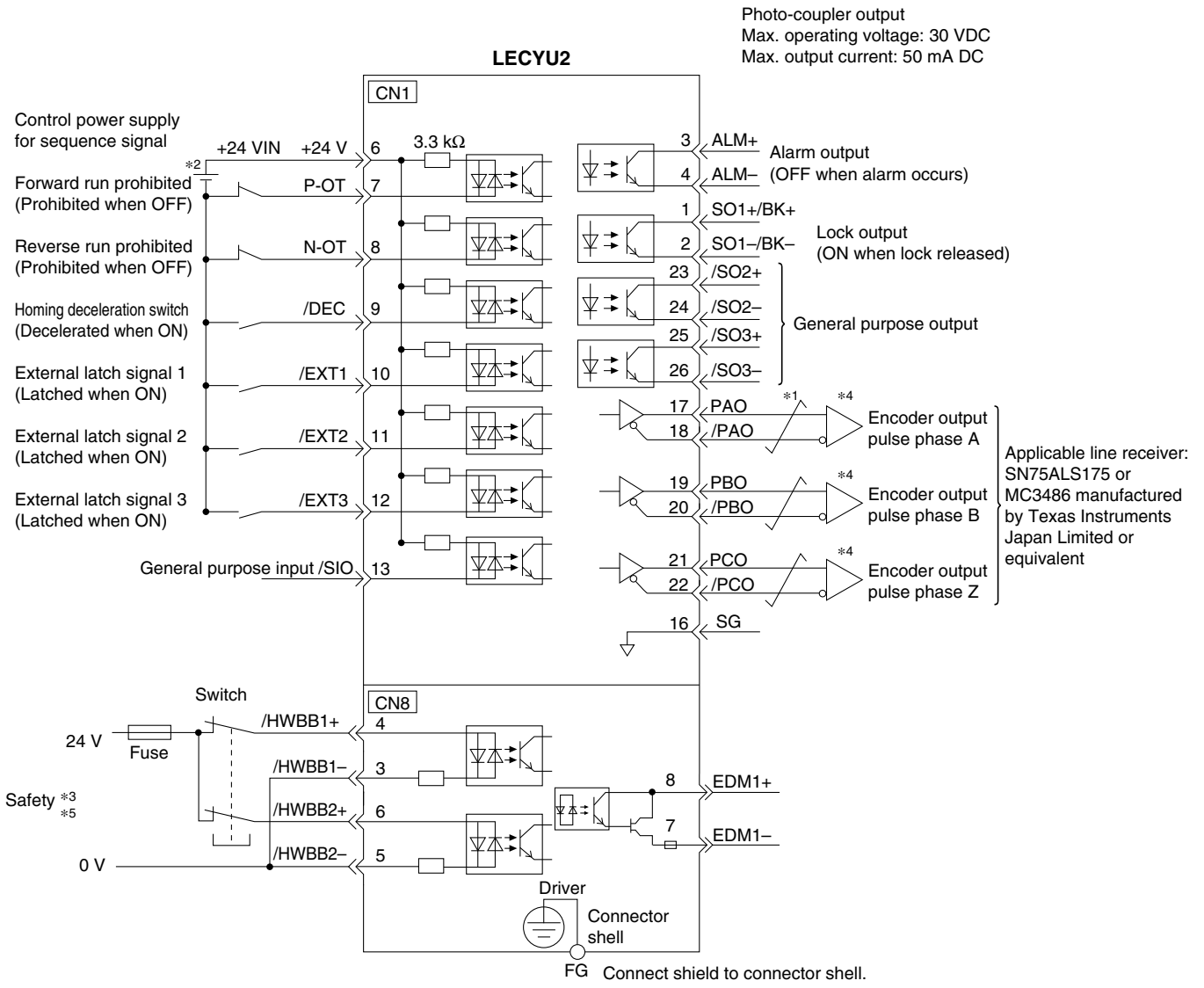

*1 ⫽ shows twisted-pair wires.

*2 The 24 VDC power supply is not included. Use a 24 VDC power supply with double insulation or reinforced insulation.

*3 When using the safety function, a safety function device must be connected to the wiring that is necessary to activate the safety function. Otherwise, the servo motor is not turned ON. When not using the safety function, use the driver with the Safety Jumper Connector (provided as an accessory) inserted into the CN8.

*4 Always use line receivers to receive the output signals.
** The functions allocated to the input signals /DEC, P-OT, N-OT, /EXT1, /EXT2, and /EXT3, and the output signals /SO1, /SO2, and /SO3 can be changed by setting the parameters.

*5 It is a safety function equivalent to the STO function (IEC 61800-5-2) using the hard wire base block function (HWBB).

Options

Motor cable, Motor cable for lock option, Encoder cable (LECYM/LECYU common)

LE − CY M − S 5 A − 5

Motor type

Y	AC servo motor

Cable description

M	Motor cable
B	Motor cable for lock option
E	Encoder cable (With battery case)

Cable type

S	Standard cable
R	Robotic cable

Cable length (L) [m]

3	3
5	5
A	10
C	20

Motor capacity

5	100 W
7	200 W

∗ For encoder cable, the suffix "–□" (Motor capacity) is not necessary.

Direction of connector

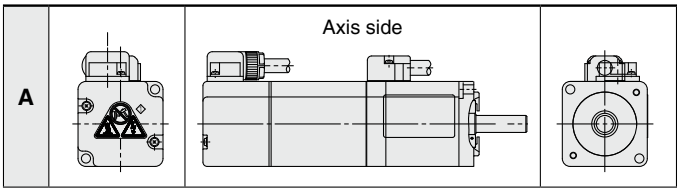

∗ The cable entry direction is axis side only.

LE-CYM-□□A-□: Motor cable

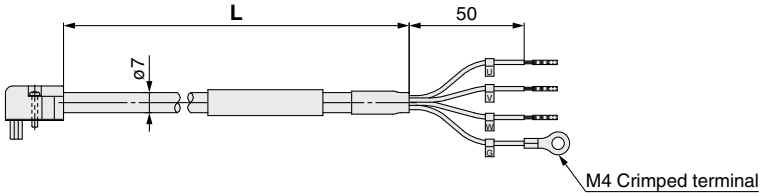

Weight

Product no.	Length [m]	Weight [g]	Note
LE-CYM-S3A-5	3	250	100 W
LE-CYM-S5A-5	5	390	
LE-CYM-SAA-5	10	750	
LE-CYM-SCA-5	20	1500	
LE-CYM-S3A-7	3	250	200 W
LE-CYM-S5A-7	5	390	
LE-CYM-SAA-7	10	750	
LE-CYM-SCA-7	20	1500	
LE-CYM-R3A-5	3	220	100 W
LE-CYM-R5A-5	5	350	
LE-CYM-RAA-5	10	670	
LE-CYM-RCA-5	20	1300	
LE-CYM-R3A-7	3	220	200 W
LE-CYM-R5A-7	5	350	
LE-CYM-RAA-7	10	670	
LE-CYM-RCA-7	20	1300	

LE-CYB-□□A-□: Motor cable for lock option

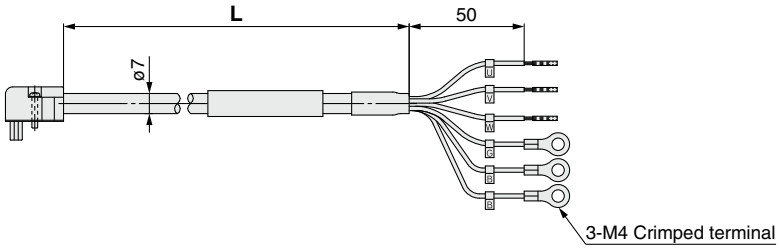

Weight

Product no.	Length [m]	Weight [g]	Note
LE-CYB-S3A-5	3	240	100 W
LE-CYB-S5A-5	5	390	
LE-CYB-SAA-5	10	750	
LE-CYB-SCA-5	20	1490	
LE-CYB-S3A-7	3	240	200 W
LE-CYB-S5A-7	5	390	
LE-CYB-SAA-7	10	750	
LE-CYB-SCA-7	20	1490	
LE-CYB-R3A-5	3	220	100 W
LE-CYB-R5A-5	5	350	
LE-CYB-RAA-5	10	670	
LE-CYB-RCA-5	20	1300	
LE-CYB-R3A-7	3	220	200 W
LE-CYB-R5A-7	5	350	
LE-CYB-RAA-7	10	670	
LE-CYB-RCA-7	20	1300	

LE-CYE-□□A: Encoder cable

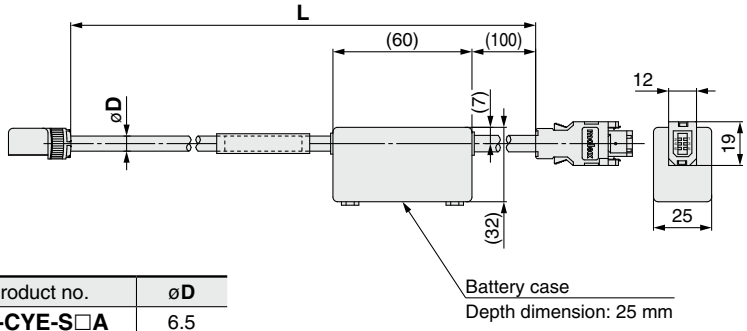

Product no.	øD
LE-CYE-S□A	6.5
LE-CYE-R□A	6.8

Weight

Product no.	Length [m]	Weight [g]
LE-CYE-S3A	3	230
LE-CYE-S5A	5	360
LE-CYE-SAA	10	680
LE-CYE-SCA	20	1250
LE-CYE-R3A	3	220
LE-CYE-R5A	5	330
LE-CYE-RAA	10	660
LE-CYE-RCA	20	1240

∗ LE-CYM-S□A-□ is JZSP-CSM0□-□□-E manufactured by YASKAWA CONTROLS CO., LTD.
LE-CYB-S□A-□ is JZSP-CSM1□-□□-E manufactured by YASKAWA CONTROLS CO., LTD.
LE-CYE-S□A is JZSP-CSP05-□□-E manufactured by YASKAWA CONTROLS CO., LTD.
LE-CYM-R□A-□ is JZSP-CSM2□-□□-E manufactured by YASKAWA CONTROLS CO., LTD.
LE-CYB-R□A-□ is JZSP-CSM3□-□□-E manufactured by YASKAWA CONTROLS CO., LTD.
LE-CYE-R□A is JZSP-CSP25-□□-E manufactured by YASKAWA CONTROLS CO., LTD.

Options

I/O connector (Without cable, Connector only)

LE − CYN A

Driver type

A	**For LECYM2, LECYU2**

LE-CYNA

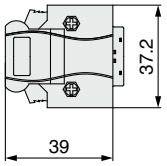

Weight

Product no.	Weight [g]
LE-CYNA	25

∗ LE-CYNA: 10126-3000PE (connector)/10326-52F0-008 (shell kit) manufactured by 3M Japan Limited or equivalent
∗ Conductor size: AWG24 to 30

I/O cable

LEC − CSN A − 1

Driver type

A	**For LECYM2, LECYU2**

Cable length (L) [m]

1	1.5

Weight

Product no.	Weight [g]
LEC-CSNA-1	303

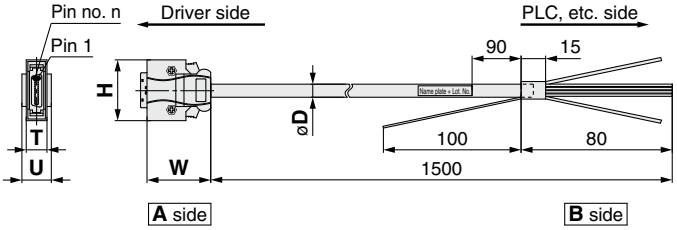

∗ LEC-CSNA-1: 10126-3000PE (connector)/10326-52F0-008 (shell kit) manufactured by 3M Japan Limited or equivalent
∗ Conductor size: AWG24

Wiring

LEC-CSNA-1: Pin nos. 1 to 26

Connector pin no.		Pair no. of wire	Insulation color	Dot mark	Dot color
A side	1	1	Orange	▬	Red
	2			▬	Black
	3	2	Light gray	▬	Red
	4			▬	Black
	5	3	White	▬	Red
	6			▬	Black
	7	4	Yellow	▬	Red
	8			▬	Black
	9	5	Pink	▬	Red
	10			▬	Black

Connector pin no.		Pair no. of wire	Insulation color	Dot mark	Dot color
A side	11	6	Orange	▬ ▬	Red
	12			▬ ▬	Black
	13	7	Light gray	▬ ▬	Red
	14			▬ ▬	Black
	15	8	White	▬ ▬	Red
	16			▬ ▬	Black
	17	9	Yellow	▬ ▬	Red
	18			▬ ▬	Black
	19	10	Pink	▬ ▬	Red
	20			▬ ▬	Black

Connector pin no.		Pair no. of wire	Insulation color	Dot mark	Dot color
A side	21	11	Orange	▬ ▬ ▬	Red
	22			▬ ▬ ▬	Black
	23	12	Light gray	▬ ▬ ▬	Red
	24			▬ ▬ ▬	Black
	25	13	White	▬ ▬ ▬	Red
	26			▬ ▬ ▬	Black

Cable O.D.

Product no.	øD
LEC-CSNA-1	11.1

Dimensions/Pin No.

Product no.	W	H	T	U	Pin no. n
LEC-CSNA-1	39	37.2	12.7	14	14

Options

MECHATROLINK cable type

LEC−CY M − 1

Motor type

Y	AC servo motor

Cable description

M	MECHATROLINK-Ⅱ cable
U	MECHATROLINK-Ⅲ cable

Cable length (L)

L∗1	0.2 m
J	0.5 m
1	1 m
3	3 m

∗1 Not available for the MECHATROLINK-Ⅱ cable

∗ LEC-CYM-□ is JEPMC-W6002-□□-E manufactured by YASKAWA CONTROLS CO., LTD.
∗ LEC-CYU-□ is JEPMC-W6012-□□-E manufactured by YASKAWA CONTROLS CO., LTD.

MECHATROLINK-Ⅱ cable

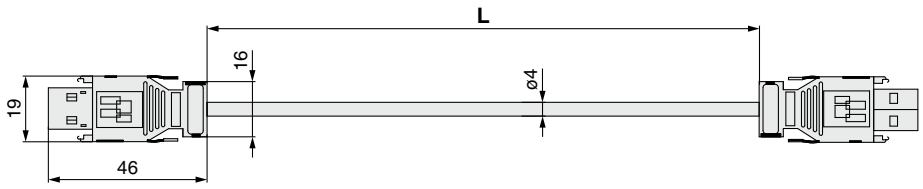

Weight

Product no.	Length [m]	Weight [g]
LEC-CYM-J	0.5	50
LEC-CYM-1	1	80
LEC-CYM-3	3	200

MECHATROLINK-Ⅲ cable

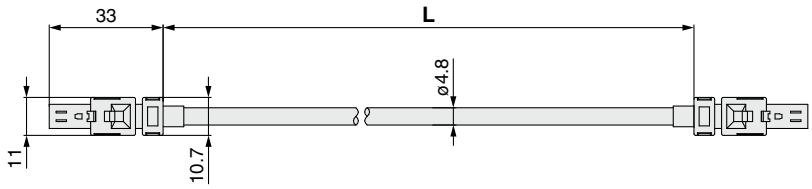

Weight

Product no.	Length [m]	Weight [g]
LEC-CYU-L	0.2	21
LEC-CYU-J	0.5	41
LEC-CYU-1	1	75
LEC-CYU-3	3	205

Terminating connector for MECHATROLINK-Ⅱ

LEC−CYRM

∗ LEC-CYRM is JEPMC-W6022-E manufactured by YASKAWA CONTROLS CO., LTD.

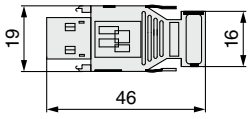

Weight: 10 g

Options

LECYM2 LECYU2
Drivers

USB cable

PC

Setup software (SigmaWin+™) (LECYM/LECYU common)

∗ Please download the SigmaWin+™ via our website.
SigmaWin+™ is a registered trademark or trademark of YASKAWA Electric Corporation.

Adjustment, waveform display, parameter reading/writing, and test operations can be performed on a PC.

Compatible PCs

When using the setup software (SigmaWin+™), use an IBM PC/AT compatible PC that meets the following operating conditions.

Hardware Requirements

Equipment		Setup software (SigmaWin+™) Ver. 5	Setup software (SigmaWin+™) Ver. 7
∗1, 2, 3, 4 PC	OS	Windows® XP∗5, Windows Vista®, Windows® 7 (32-bit/64-bit)	Compatible with 64-bit OS · Windows 11, Windows 10, Windows 8.1∗7, Windows 7 SP1∗8 Compatible with 32-bit OS · Windows 10, Windows 8.1∗7, Windows 7 SP1∗8
	Available HD space	350 MB or more (When the software is installed, 400 MB or more is recommended.)	500 MB or more
	Communication interface	Uses the USB port	
Display		XVGA monitor (1024 x 768 or more, used with small font) 256 color or more (65536 color or more is recommended) Connectable with the PCs listed above	Resolution: 1280 x 800 or more (Recommended) Connectable with the PCs listed above
Keyboard		Connectable with the PCs listed above	
Mouse		Connectable with the PCs listed above	
Printer		Connectable with the PCs listed above	
USB cable		LEC-JZ-CVUSB∗6	
Other		Adobe Reader Ver. 5.0 or higher (∗ Excludes Ver. 6.0)	—

∗1 Windows, Windows Vista®, Windows® 7, Windows® 8.1, Windows® 10, and Windows® 11 are registered trademarks of Microsoft Corporation in the United States and/or other countries.
∗2 On some PCs, this software may not run properly.
∗3 Not compatible with 64-bit Windows® XP and 64-bit Windows Vista®
∗4 For Windows® XP, install and run the software as an administrator.
∗5 For PCs that have HotfixQ328310 installed, installation of the software is likely to fail. In such cases, install HotfixQ329623 instead.
∗6 Order a USB cable separately.
∗7 WindowsUpdate KB2919442, KB2919355, and KB2999226 are required.
∗8 WindowsUpdate KB2999226 is required.

Battery (LECYM/LECYU common)

Replacement batteries must be purchased from YASKAWA Electric Corporation.

Part no.: JZSP-BA01
manufactured by YASKAWA Electric Corporation

Battery for replacement
Absolute position data is maintained by installing the battery to the battery case of the encoder cable.

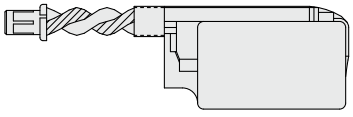

Weight: 10 g

∗ The JZSP-BA01 is a single battery that uses a lithium metal battery ER3V.
When transporting lithium metal batteries and devices with built-in lithium metal batteries by a method subject to UN regulations, it is necessary to apply measures according to the regulations stipulated in the United Nations Recommendations on the Transport of Dangerous Goods, the Technical Instructions (ICAO-TI) of the International Civil Aviation Organization (ICAO), and the International Maritime Dangerous Goods Code (IMDG CODE) of the International Maritime Organization (IMO). If a customer is to transport such products, it is necessary for them to confirm the latest regulations, or the laws and regulations of the country of transport, on their own in order to apply the proper measures.

USB cable (2.5 m)

LEC−JZ−CVUSB

∗ JZSP-CVS06-02-E manufactured by YASKAWA CONTROLS CO., LTD.

Cable for connecting the PC and driver when using the setup software (SigmaWin+™)
Do not use any cable other than this cable.

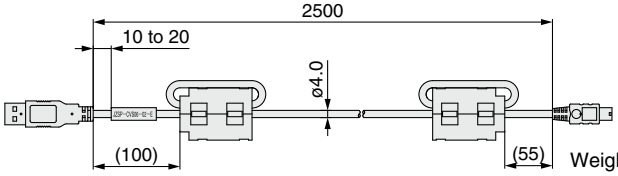

Weight: 150 g

Cable for safety function device (3 m)

LEC−JZ−CVSAF

∗ JZSP-CVH03-03-E manufactured by YASKAWA CONTROLS CO., LTD.

Cable for connecting the driver and device when using the safety function
Do not use any cable other than this cable.

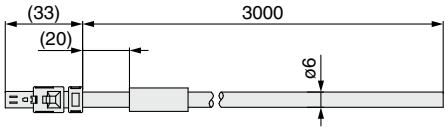

Weight: 160 g

LECSA/LECS□-T/LECY□ Series
Specific Product Precautions 1

Be sure to read this before handling the products. Refer to the back cover for safety instructions. For electric actuator and auto switch precautions, refer to the "Handling Precautions for SMC Products" and the "Operation Manual" on the SMC website: https://www.smcworld.com

Design / Selection

⚠Warning

1. Be sure to apply the specified voltage.
Otherwise, malfunction or breakage may occur. If the applied voltage is lower than the specified voltage, it is possible that the load will not be able to be moved due to an internal voltage drop of the driver. Please check the operating voltage before use.

2. Do not operate the product beyond the specifications.
Otherwise, a fire, malfunction, or actuator damage may result. Please check the specifications before use.

3. Install an emergency stop circuit.
Please install an emergency stop outside of the enclosure so that the system operation can be stopped immediately and the power supply can be intercepted.

4. In order to prevent any damage caused by the breakdown or malfunction of the driver and its peripheral devices, a backup system should be established in advance by giving a multiple-layered structure or a fail-safe design to the equipment, etc.

5. If the danger of human injury is expected due to abnormal heat generation, smoking, ignition, etc., of the driver and its peripheral devices, cut off the power supply of the product and the system immediately.

6. The parameters of the driver are set to initial values. Please change the parameters according to the specifications of the customer's equipment before use. Refer to the operation manual for parameter details.

Handling

⚠Warning

1. Do not touch the inside of the driver and its peripheral devices.
Doing so may cause an electric shock or damage to the driver.

2. Do not perform the operation or setting of the product with wet hands.
Doing so may cause an electric shock.

3. Products with damage or those missing any components should not be used.
An electric shock, fire, or injury may result.

4. Use only the specified combination between the electric actuator and the driver.
Failure to do so may cause damage to the actuator or the driver.

5. Be careful not to be hit by workpieces while the actuator is moving.
It may cause an injury.

6. Do not connect the power supply or power on the product before confirming the area to which the workpiece moves is safe.
The movement of the workpiece may cause an accident.

7. Do not touch the product when it is energized and for some time after the power has been disconnected, as it is very hot.
Doing so may lead to a burn due to the high temperature.

8. Before installation, wiring, and maintenance, the voltage should be checked with a tester 5 minutes after the power supply has been turned off.
Otherwise, an electric shock, fire, or injury may result.

Handling

⚠Warning

9. Static electricity may cause a malfunction or break the driver. Do not touch the driver while power is supplied.
When touching the driver for maintenance, take sufficient measures to eliminate static electricity.

10. Do not use the product in an area where dust, powder dust, water, chemicals, or oil is in the air.
It will cause failure or malfunction.

11. Do not use the product in an area where a magnetic field is generated.
It will cause failure or malfunction.

12. Do not install the product in an environment containing flammable gas, explosive gas, or corrosive gas.
It could lead to fire, explosion, or corrosion.

13. Radiant heat from strong heat sources, such as a furnace, direct sunlight, etc., should not be applied to the product.
It will cause failure of the driver or its peripheral devices.

14. Do not use the product in an environment subject to a temperature cycle.
It will cause failure of the driver or its peripheral devices.

15. Do not use the product in a place where surges are generated.
When there are units that generate a large amount of surge around the product (e.g. solenoid type lifters, high-frequency induction furnaces, motors, etc.), this may cause deterioration or damage to the product's internal circuit. Avoid sources of surge generation and crossed lines.

16. Do not install the product in an environment under the effect of vibrations and impacts.
It will cause failure or malfunction.

17. When a surge-generating load, such as a relay or solenoid valve, is driven directly, use a product that incorporates a surge absorption element.

Installation

⚠Warning

1. Install the driver and its peripheral devices on a fireproof material.
Direct installation on or near a flammable material may cause a fire.

2. Do not install the product in a place subject to vibrations and impacts.
It will cause failure or malfunction.

3. The driver should be mounted on a vertical wall in a vertical direction. Also, be sure not to cover the driver's suction/exhaust ports.

4. Install the driver and its peripheral devices on a flat surface.
If the mounting surface is distorted or uneven, an unacceptable force may be added to the housing, etc., causing problems.

LECSA/LECS□-T/LECY□ Series
Specific Product Precautions 2

Be sure to read this before handling the products. Refer to the back cover for safety instructions. For electric actuator and auto switch precautions, refer to the "Handling Precautions for SMC Products" and the "Operation Manual" on the SMC website: https://www.smcworld.com

Power Supply

⚠Caution

1. **Use a power supply that has low noise between lines and between the power and ground.**
   In cases where noise is high, an isolation transformer should be used.
2. **To prevent lightning surges, appropriate measures should be taken. Ground the surge absorber for lightning separately from the grounding of the driver and its peripheral devices.**

Wiring

⚠Warning

1. **The driver will be damaged if a commercial power supply (100/200 V) is added to the driver's servo motor power (U, V, and W). Be sure to check wiring for mistakes when the power supply is turned on.**
2. **Connect the ends of the U, V, and W wires of the motor cable correctly to the phases (U, V, and W) of the servo motor power. If these wires do not match up, the servo motor cannot be controlled.**

Grounding

⚠Warning

1. **For grounding the actuator, connect the copper wire of the actuator to the driver's protective earth (PE) terminal and connect the copper wire of the driver to the earth via the control panel's protective earth (PE) terminal.**
   Do not connect them directly to the control panel's protective earth (PE) terminal.

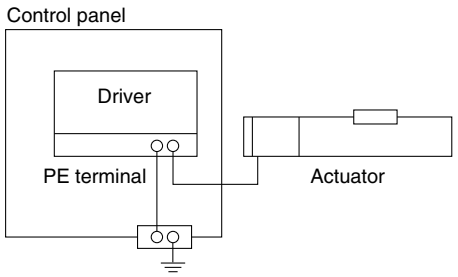

2. **In the unlikely event that a malfunction is caused by the ground, please disconnect it.**

Maintenance

⚠Warning

1. **Perform a maintenance and inspection periodically.**
   Confirm wiring and screws are not loose.
   Loose screws or wires may cause unintentional malfunction.
2. **Conduct an appropriate functional inspection after completing the maintenance and inspection.**
   At times where the equipment or machinery does not operate properly, conduct an emergency stop of the system. Otherwise, an unexpected malfunction may occur and it will become impossible to ensure safety. Conduct a test of the emergency stop in order to confirm the safety of the equipment.
3. **Do not disassemble, modify, or repair the driver and its peripheral devices.**
4. **Do not put anything conductive or flammable inside the driver.**
   It may cause a fire.
5. **Do not conduct an insulation resistance test or withstand voltage test on this product.**
6. **Ensure sufficient space for maintenance activities.**
   Design the system allowing the required space for maintenance and inspection.

CE/UKCA/UL-compliance List

∗ For CE, UKCA, and UL-compliant products, refer to the tables below.

As of February 2022

■ Controllers "○": Compliant "×": Not compliant

Compatible motor	Series	CE UKCA	cULus	
			Compliance	Certification No. (File No.)
Battery-less absolute (Step motor 24 VDC)	**JXC51/61**	○	○	E480340
	JXCE1	○	○	E480340
	JXC91	○	○	E480340
	JXCP1	○	○	E480340
	JXCD1	○	○	E480340
	JXCL1	○	○	E480340
	JXCM1	○	○	E480340

Compatible motor	Series	CE UKCA	cULus LISTED	
			Compliance	Certification No. (File No.)
AC servo motor	**LECSA**	○	○	E466261
	LECSB-T	○	○	E466261
	LECSC-T	○	○	E466261
	LECSS-T	○	○	E466261
	LECYM	○	×	—
	LECYU	○	×	—

■ Actuators "○": Compliant

Compatible motor	Series	CE UKCA	cULus	
			Compliance	Certification No. (File No.)
Battery-less absolute (Step motor 24 VDC)	**LEKFS**	○	N/A	—
AC servo motor	**LEKFS**	○	N/A	—

∗ If the actuator is ordered separately, it does not comply with UL standards.

■ Actuators (When ordered with a controller) "○": Compliant

Compatible motor	Series	JXC51/61			JXCE1			JXC91			JXCP1		
		CE UKCA	cULus		CE UKCA	cULus		CE UKCA	cULus		CE UKCA	cULus	
			Compliance	Certification No. (File No.)		Compliance	Certification No. (File No.)		Compliance	Certification No. (File No.)		Compliance	Certification No. (File No.)
Battery-less absolute (Step motor 24 VDC)	**LEKFS**	○	N/A	—	○	N/A	—	○	N/A	—	○	N/A	—

Compatible motor	Series	JXCD1			JXCL1			JXCM1		
		CE UKCA	cULus		CE UKCA	cULus		CE UKCA	cULus	
			Compliance	Certification No. (File No.)		Compliance	Certification No. (File No.)		Compliance	Certification No. (File No.)
Battery-less absolute (Step motor 24 VDC)	**LEKFS**	○	N/A	—	○	N/A	—	○	N/A	—

■ Actuators (When ordered with a controller) "○": Compliant "—": Not applicable

Compatible motor	Series	LECSA∗1			LECSB-T∗1			LECSC-T∗1		
		CE UKCA	cULus		CE UKCA	cULus		CE UKCA	cULus	
			Compliance	Certification No. (File No.)		Compliance	Certification No. (File No.)		Compliance	Certification No. (File No.)
AC servo motor	**LEKFS**	○	N/A	—	○	N/A	—	○	N/A	—

Compatible motor	Series	LECSS-T∗1			LECYM-V			LECYU-V		
		CE UKCA	cULus		CE UKCA	cULus		CE UKCA	cULus	
			Compliance	Certification No. (File No.)		Compliance	Certification No. (File No.)		Compliance	Certification No. (File No.)
AC servo motor	**LEKFS**	○	N/A	—	○	N/A	—	○	N/A	—

∗1 There is a "UL Listed" mark on the AC servo motor driver body.

⚠ Safety Instructions

These safety instructions are intended to prevent hazardous situations and/or equipment damage. These instructions indicate the level of potential hazard with the labels of **"Caution," "Warning"** or **"Danger."** They are all important notes for safety and must be followed in addition to International Standards (ISO/IEC)*1), and other safety regulations.

⚠ Caution: **Caution** indicates a hazard with a low level of risk which, if not avoided, could result in minor or moderate injury.

⚠ Warning: **Warning** indicates a hazard with a medium level of risk which, if not avoided, could result in death or serious injury.

⚠ Danger : **Danger** indicates a hazard with a high level of risk which, if not avoided, will result in death or serious injury.

*1) ISO 4414: Pneumatic fluid power – General rules relating to systems.
ISO 4413: Hydraulic fluid power – General rules relating to systems.
IEC 60204-1: Safety of machinery – Electrical equipment of machines.
(Part 1: General requirements)
ISO 10218-1: Manipulating industrial robots – Safety.
etc.

⚠ Warning

1. The compatibility of the product is the responsibility of the person who designs the equipment or decides its specifications.

Since the product specified here is used under various operating conditions, its compatibility with specific equipment must be decided by the person who designs the equipment or decides its specifications based on necessary analysis and test results. The expected performance and safety assurance of the equipment will be the responsibility of the person who has determined its compatibility with the product. This person should also continuously review all specifications of the product referring to its latest catalog information, with a view to giving due consideration to any possibility of equipment failure when configuring the equipment.

2. Only personnel with appropriate training should operate machinery and equipment.

The product specified here may become unsafe if handled incorrectly. The assembly, operation and maintenance of machines or equipment including our products must be performed by an operator who is appropriately trained and experienced.

3. Do not service or attempt to remove product and machinery/ equipment until safety is confirmed.

1. The inspection and maintenance of machinery/equipment should only be performed after measures to prevent falling or runaway of the driven objects have been confirmed.
2. When the product is to be removed, confirm that the safety measures as mentioned above are implemented and the power from any appropriate source is cut, and read and understand the specific product precautions of all relevant products carefully.
3. Before machinery/equipment is restarted, take measures to prevent unexpected operation and malfunction.

4. Contact SMC beforehand and take special consideration of safety measures if the product is to be used in any of the following conditions.

1. Conditions and environments outside of the given specifications, or use outdoors or in a place exposed to direct sunlight.
2. Installation on equipment in conjunction with atomic energy, railways, air navigation, space, shipping, vehicles, military, medical treatment, combustion and recreation, or equipment in contact with food and beverages, emergency stop circuits, clutch and brake circuits in press applications, safety equipment or other applications unsuitable for the standard specifications described in the product catalog.
3. An application which could have negative effects on people, property, or animals requiring special safety analysis.
4. Use in an interlock circuit, which requires the provision of double interlock for possible failure by using a mechanical protective function, and periodical checks to confirm proper operation.

⚠ Caution

1. The product is provided for use in manufacturing industries.

The product herein described is basically provided for peaceful use in manufacturing industries.
If considering using the product in other industries, consult SMC beforehand and exchange specifications or a contract if necessary.
If anything is unclear, contact your nearest sales branch.

Limited warranty and Disclaimer/ Compliance Requirements

The product used is subject to the following "Limited warranty and Disclaimer" and "Compliance Requirements".
Read and accept them before using the product.

Limited warranty and Disclaimer

1. The warranty period of the product is 1 year in service or 1.5 years after the product is delivered, whichever is first.*2)
   Also, the product may have specified durability, running distance or replacement parts. Please consult your nearest sales branch.
2. For any failure or damage reported within the warranty period which is clearly our responsibility, a replacement product or necessary parts will be provided.
   This limited warranty applies only to our product independently, and not to any other damage incurred due to the failure of the product.
3. Prior to using SMC products, please read and understand the warranty terms and disclaimers noted in the specified catalog for the particular products.

*2) **Vacuum pads are excluded from this 1 year warranty.**
A vacuum pad is a consumable part, so it is warranted for a year after it is delivered.
Also, even within the warranty period, the wear of a product due to the use of the vacuum pad or failure due to the deterioration of rubber material are not covered by the limited warranty.

Compliance Requirements

1. The use of SMC products with production equipment for the manufacture of weapons of mass destruction (WMD) or any other weapon is strictly prohibited.
2. The exports of SMC products or technology from one country to another are governed by the relevant security laws and regulations of the countries involved in the transaction. Prior to the shipment of a SMC product to another country, assure that all local rules governing that export are known and followed.

⚠ Caution

SMC products are not intended for use as instruments for legal metrology.

Measurement instruments that SMC manufactures or sells have not been qualified by type approval tests relevant to the metrology (measurement) laws of each country. Therefore, SMC products cannot be used for business or certification ordained by the metrology (measurement) laws of each country.

Revision History

Edition B
* Size 16 has been added to the battery-less absolute type (step motor 24 VDC).
* An AC servo motor type has been added.
* UKCA compliance has been added.
* The JXC□ series controller with STO sub-function has been added.
* The number of pages has been increased from 60 to 132. AZ

⚠ Safety Instructions Be sure to read the "Handling Precautions for SMC Products" (M-E03-3) and "Operation Manual" before use.

SMC Corporation
Akihabara UDX 15F,
4-14-1, Sotokanda, Chiyoda-ku, Tokyo 101-0021, JAPAN
Phone: 03-5207-8249 Fax: 03-5298-5362
https://www.smcworld.com

© 2022 SMC Corporation All Rights Reserved